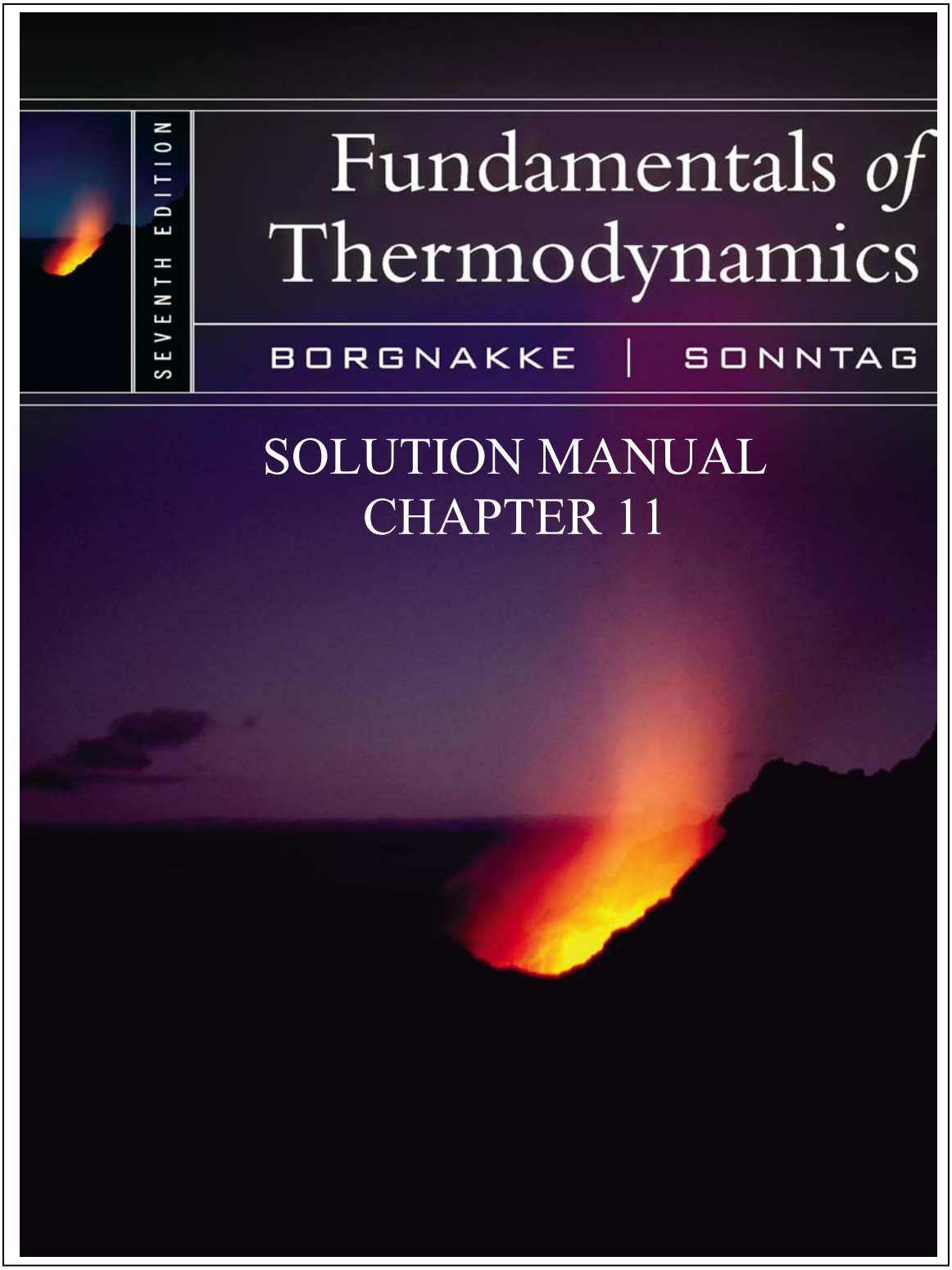

SOLUTION MANUAL
CHAPTER 11

CONTENT

In-Text Concept Questions

11.a

Consider a Rankine cycle without superheat. How many single properties are needed to determine the cycle? Repeat the answer for a cycle with superheat.

a. No superheat. Two single properties.
High pressure (or temperature) and **low pressure** (or **temperature**). This assumes the condenser output is saturated liquid and the boiler output is saturated vapor. Physically the high pressure is determined by the pump and the low temperature is determined by the cooling medium.

b. Superheat. Three single properties.
High pressure and **temperature** and **low pressure** (or **temperature**). This assumes the condenser output is saturated liquid. Physically the high pressure is determined by the pump and the high temperature by the heat transfer from the hot source. The low temperature is determined by the cooling medium.

11.b

Which component determines the high pressure in a Rankine cycle? What determines the low pressure?

The high pressure in the Rankine cycle is determined by the pump. The low pressure is determined as the saturation pressure for the temperature you can cool to in the condenser.

11.c

What is the difference between an open and a closed feedwater heater?

The open feedwater heater mixes the two flows at the extraction pressure and thus requires two feedwater pumps.

The closed feedwater heater does not mix the flows but let them exchange energy (it is a two fluid heat exchanger). The flows do not have to be at the same pressure. The condensing source flow is dumped into the next lower pressure feedwater heater or the condenser or it is pumped up to line pressure by a drip pump and added to the feedwater line.

11.d

In a cogenerating power plant, what is cogenerated?

The electricity is cogenerated. The main product is a steam supply.

11.e

A refrigerator in my 20°C kitchen uses R-134a and I want to make ice cubes at –5°C. What is the minimum high P and the maximum low P it can use?

Since the R-134a must give heat transfer out to the kitchen air at 20°C, it must at least be that hot at state 3.

From Table B.5.1: $P_3 = P_2 = P_{sat}$ = **573 kPa** is minimum high P.

Since the R-134a must absorb heat transfer at the freezers –5°C, it must at least be that cold at state 4.

From Table B.5.1: $P_1 = P_4 = P_{sat}$ = **245 kPa** is maximum low P.

11.f

How many parameters are needed to completely determine a standard vapor compression refrigeration cycle?

Two parameters: The high pressure and the low pressure. This assumes the exit of the condenser is saturated liquid and the exit of the evaporator is saturated vapor.

Concept-Study Guide Problems

11.1

Is a steam power plant running in a Carnot cycle? Name the four processes.

No. It runs in a Rankine cycle.

1-2:	An isentropic compression (constant s)	Pump
2-3:	An isobaric heating (constant P)	Boiler
3-4:	An isentropic expansion (constant s)	Turbine
4-1:	An isobaric cooling, heat rejection (constant P)	Condenser

11.2

Raising the boiler pressure in a Rankine cycle for fixed superheat and condenser temperatures in what direction do these change: turbine work, pump work and turbine exit T or x.

Turbine work: about the same P up, but v down
Turbine exit T: same if it was two-phase, down if sup. vapor
Turbine exit x: down
Pump work: up

11.3

For other properties fixed in a Rankine cycle raising the condenser temperature causes changes in which work and heat transfer terms?

This results in less turbine work out.
An increase in heat rejection.
A small reduction in pump work.
A small reduction in boiler heat addition.

11.4

Mention two benefits of a reheat cycle.

The reheat raises the average temperature at which you add heat.

The reheat process brings the states at the lower pressure further out in the superheated vapor region and thus raises the quality (if two-phase) in the last turbine section.

11.5

What is the benefit of the moisture separator in the powerplant of Problem 6.106?

You avoid larger droplets in the turbine and raise the quality for the later stages.

11.6

Instead of the moisture separator in Problem 6.106 what could have been done to remove any liquid in the flow?

A reheat could be done to re-boil the liquid and even superheat it.

11.7

Can the energy removed in a power plant condenser be useful?

Yes.

In some applications it can be used for heating buildings locally or as district heating. Other uses could be to heat greenhouses or as general process steam in a food process or paper mill. These applications are all based on economics and scale. The condenser then has to operate at a higher temperature than it otherwise would.

11.8

If the district heating, see Fig.1.1, should supply hot water at 90°C what is the lowest possible condenser pressure with water as the working substance?

The condenser temperature must be higher than 90°C for which the saturation pressure is 70.14 kPa.

P **> 70.14 kPa**

11.9

What is the mass flow rate through the condensate pump in Fig. 11.14?

We need to check the continuity equation around several CVs.

Do control volume around HP turbine:

Number in 1000 kg/h: 0 = + 320 – 28 – 28 – 12 – out to LP turbine
out to LP turbine = 252 000 kg/h

which matches with Fig.: 227 000 in condenser + 25 000 from trap

Condensate pump (main) has **252 000 kg/h**

11.10

A heat pump for a 20°C house uses R-410a and the outside is at –5°C. What is the minimum high P and the maximum low P it can use?

As the heat pump must be able to heat at 20°C that becomes the smallest possible condensing temperature and thus $P > P_{sat}$ = **1444 kPa**.

It must absorb heat from –5°C and thus must be colder in the evaporation process so $P < P_{sat}$ = **679 kPa.**

11.11

A heat pump uses carbon dioxide and it is required that it condenses at a minimum of 22°C and receives energy from the outside on a winter day at -10°C. What restrictions does that place on the operating pressures?

The high pressure $P > P_{sat} = 6003$ kPa, close to critical $P = 7377$ kPa

The low pressure $P < P_{sat} = 2649$ kPa

Notice for carbon dioxide that the low pressure is fairly high.

11.12

Since any heat transfer is driven by a temperature difference, how does that affect all the real cycles relative to the ideal cycles?

Heat transfers are given as $\dot{Q} = CA\,\Delta T$ so to have a reasonable rate the area and the temperature difference must be large. The working substance then must have a different temperature than the ambient it exchanges energy with. This gives a smaller temperature difference for a heat engine with a lower efficiency as a result. The refrigerator or heat pump must have the working substance with a higher temperature difference than the reservoirs and thus a lower coefficient of performance (COP).

The smaller CA is, the larger ΔT must be for a certain magnitude of the heat transfer rate. This can be a design problem, think about the front end air intake grill for a modern car which is very small compared to a car 20 years ago.

Simple Rankine cycles

11.13

A steam power plant as shown in Fig. 11.3 operating in a Rankine cycle has saturated vapor at 3.0 MPa leaving the boiler. The turbine exhausts to the condenser operating at 10 kPa. Find the specific work and heat transfer in each of the ideal components and the cycle efficiency.

Solution:

C.V. Pump Reversible and adiabatic.

Energy: $w_p = h_2 - h_1$; Entropy: $s_2 = s_1$

since incompressible it is easier to find work (positive in) as

$w_p = \int v\, dP = v_1 (P_2 - P_1) = 0.00101\ (3000 - 10) = 3.02$ kJ/kg

=> $h_2 = h_1 + w_p = 191.81 + 3.02 = 194.83$ kJ/kg

C.V. Boiler : $q_H = h_3 - h_2 = 2804.14 - 194.83 =$ **2609.3 kJ/kg**

C.V. Turbine : $w_T = h_3 - h_4$; $s_4 = s_3$

$s_4 = s_3 = 6.1869 = 0.6492 + x_4\ (7.501)$ => $x_4 = 0.7383$

=> $h_4 = 191.81 + 0.7383\ (2392.82) = 1958.34$ kJ/kg

$w_T = 2804.14 - 1958.34 =$ **845.8 kJ/kg**

C.V. Condenser : $q_L = h_4 - h_1 = 1958.34 - 191.81 =$ **1766.5 kJ/kg**

$\eta_{cycle} = w_{net} / q_H = (w_T + w_p) / q_H = (845.8 - 3.0) / 2609.3 =$ **0.323**

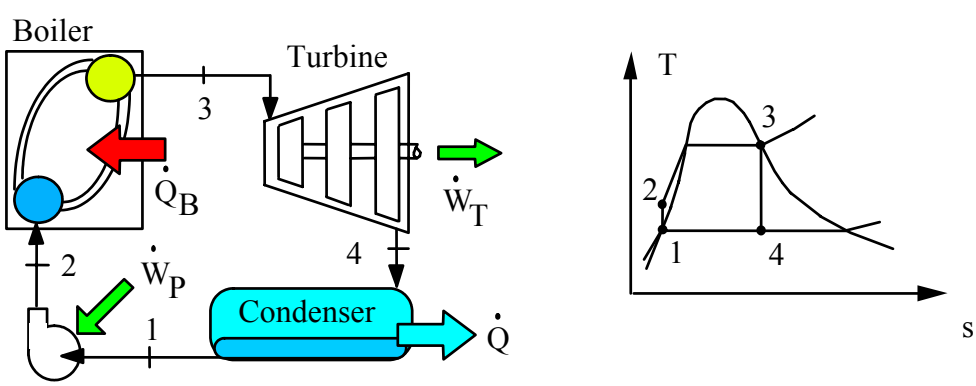

11.14

Consider a solar-energy-powered ideal Rankine cycle that uses water as the working fluid. Saturated vapor leaves the solar collector at 175°C, and the condenser pressure is 10 kPa. Determine the thermal efficiency of this cycle.

Solution:

C.V. H_2O ideal Rankine cycle

State 3: $T_3 = 175°C \Rightarrow P_3 = P_{G\ 175°C} = 892$ kPa, $s_3 = 6.6256$ kJ/kg K

CV Turbine adiabatic and reversible so second law gives

$$s_4 = s_3 = 6.6256 = 0.6493 + x_4 \times 7.5009 \quad => \quad x_4 = 0.797$$

$$h_4 = 191.83 + 0.797 \times 2392.8 = 2098.3 \text{ kJ/kg}$$

The energy equation gives

$$w_T = h_3 - h_4 = 2773.6 - 2098.3 = 675.3 \text{ kJ/kg}$$

C.V. pump and incompressible liquid gives work into pump

$$w_P = v_1(P_2 - P_1) = 0.00101(892 - 10) = 0.89 \text{ kJ/kg}$$

$$h_2 = h_1 + w_P = 191.83 + 0.89 = 192.72 \text{ kJ/kg}$$

C.V. boiler gives the heat transfer from the energy equation as

$$q_H = h_3 - h_2 = 2773.6 - 192.72 = 2580.9 \text{ kJ/kg}$$

The cycle net work and efficiency are found as

$$w_{NET} = w_T - w_P = 675.3 - 0.89 = 674.4 \text{ kJ/kg}$$

$$\eta_{TH} = w_{NET}/q_H = 674.4/2580.9 = \mathbf{0.261}$$

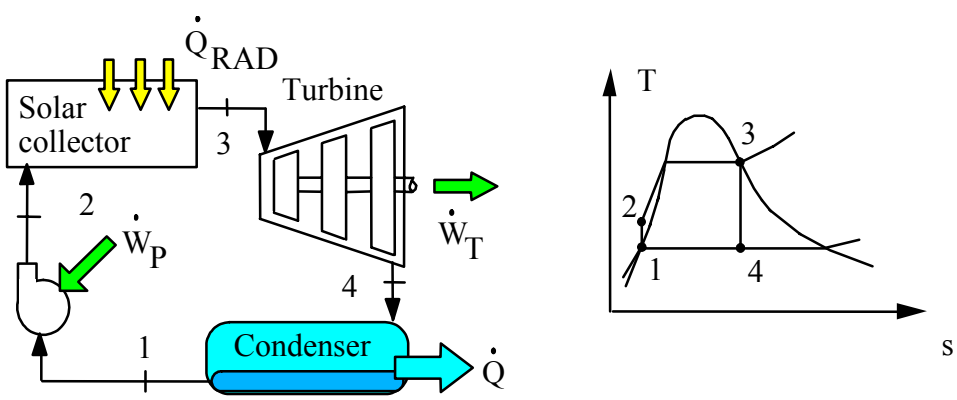

11.15

A power plant for a polar expedition uses ammonia which is heated to 80°C at 1000 kPa in the boiler and the condenser is maintained at -15°C. Find the cycle efficiency.

Solution:

Standard Rankine cycle with superheat. From the listed information we get from Table B.2.2

State 1: $h_1 = 111.66$ kJ/kg, $v_1 = 0.001519$ m^3/kg,

$P_1 = 236.3$ kPa, s = 0.4538 kJ/kgK

State 3: $h_3 = 1614.6$ kJ/kg, $s_3 = 5.4971$ kJ/kgK

C.V. Tubine: Energy: $w_{T,s} = h_3 - h_4$;

Entropy: $s_4 = s_3 = 5.4971$ kJ/kg K

$$\Rightarrow \quad x_4 = \frac{s_4 - s_f}{s_{fg}} = \frac{5.4971 - 0.4538}{5.0859} = 0.9916 \ ;$$

$$h_4 = 111.66 + 0.9916 \times 1312.9 = 1413.56 \text{ kJ/kg}$$

$$w_{T,s} = 1614.6 - 1413.56 = 201.04 \text{ kJ/kg}$$

C.V. Pump: $w_P = \int v\, dP = v_1(P_2 - P_1) = 0.001519(1000 - 236.3) = 1.16$ kJ/kg

$$\Rightarrow \quad h_2 = h_1 + w_P = 111.66 + 1.16 = 112.8 \text{ kJ/kg}$$

C.V. Boiler: $q_H = h_3 - h_2 = 1614.6 - 112.8 = 1501.8$ kJ/kg

$$\eta_{CYCLE} = w_{NET}/q_H = \frac{201.04 - 1.16}{1501.8} = \mathbf{0.133}$$

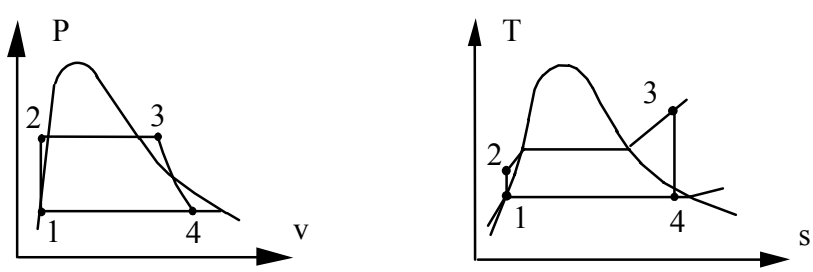

Comment: The cycle efficiency is low due to the low high temperature.

11.16

A Rankine cycle with R-410a has the boiler at 3 MPa superheating to 180°C and the condenser operates at 800 kPa. Find all four energy transfers and the cycle efficiency.

State 1: $v_1 = 0.000855$ m^3/kg, $h_1 = 57.76$ kJ/kg (at 0°C)

State 3: $h_3 = 445.09$ kJ/kg, $s_3 = 1.3661$ kJ/kg-K

State 4: (800 kPa, $s = s_3$) $h_4 = 385.97$ kJ/kg interpolated sup. vap.

C.V. Pump: $w_P = \int v\, dP = v_1(P_2 - P_1) = 0.000855\ (3000 - 800) =$ **1.881 kJ/kg**

$\Rightarrow h_2 = h_1 + w_P = 57.76 + 1.881 = 59.64$ kJ/kg

C.V. Boiler: $q_H = h_3 - h_2 = 445.09 - 59.64 =$ **385.45 kJ/kg**

C.V. Tubine: Energy: $w_{T,s} = h_3 - h_4 = 445.09 - 385.97 =$ **59.12 kJ/kg**

C.V. Condenser: $q_L = h_4 - h_1 = 385.97 - 57.76 =$ **328.21 kJ/kg**

$$\eta_{CYCLE} = w_{NET}/q_H = \frac{59.12 - 1.881}{385.45} = \mathbf{0.148}$$

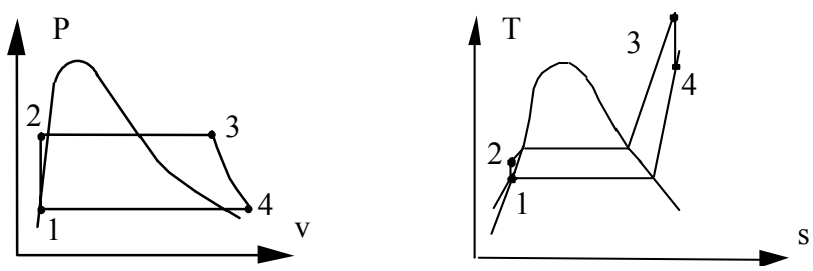

11.17

A utility runs a Rankine cycle with a water boiler at 3.0 MPa and the cycle has the highest and lowest temperatures of 450°C and 45°C respectively. Find the plant efficiency and the efficiency of a Carnot cycle with the same temperatures.

Solution:

The states properties from Tables B.1.1 and B.1.3

1: 45°C, x = 0 => $h_1 = 188.42$, $v_1 = 0.00101\ m^3/kg$, $P_{sat} = 9.6$ kPa

3: 3.0 MPa , 450°C => $h_3 = 3344$ kJ/kg, $s_3 = 7.0833$ kJ/kg K

C.V. Pump Reversible and adiabatic.

Energy: $w_p = h_2 - h_1$; Entropy: $s_2 = s_1$

since incompressible it is easier to find work (positive in) as

$$w_p = \int v\, dP = v_1 (P_2 - P_1) = 0.00101\ (3000 - 9.6) = 3.02 \text{ kJ/kg}$$

$$\Rightarrow h_2 = h_1 + w_p = 188.42 + 3.02 = 191.44 \text{ kJ/kg}$$

C.V. Boiler : $q_H = h_3 - h_2 = 3344 - 191 = 3152.56$ kJ/kg

C.V. Turbine : $w_T = h_3 - h_4$; $s_4 = s_3$

$$s_4 = s_3 = 7.0833 = 0.6386 + x_4\ (7.5261) \quad \Rightarrow \quad x_4 = 0.8563$$

$$\Rightarrow h_4 = 188.42 + 0.8563\ (2394.77) = 2239.06 \text{ kJ/kg}$$

$$w_T = 3344 - 2239.06 = 1105 \text{ kJ/kg}$$

C.V. Condenser : $q_L = h_4 - h_1 = 2239.06 - 188.42 = 2050.64$ kJ/kg

$$\eta_{cycle} = w_{net} / q_H = (w_T + w_p) / q_H = (1105 - 3.02) / 3152.56 = \mathbf{0.349}$$

$$\eta_{carnot} = 1 - T_L / T_H = 1 - \frac{273.15 + 45}{273.15 + 450} = \mathbf{0.56}$$

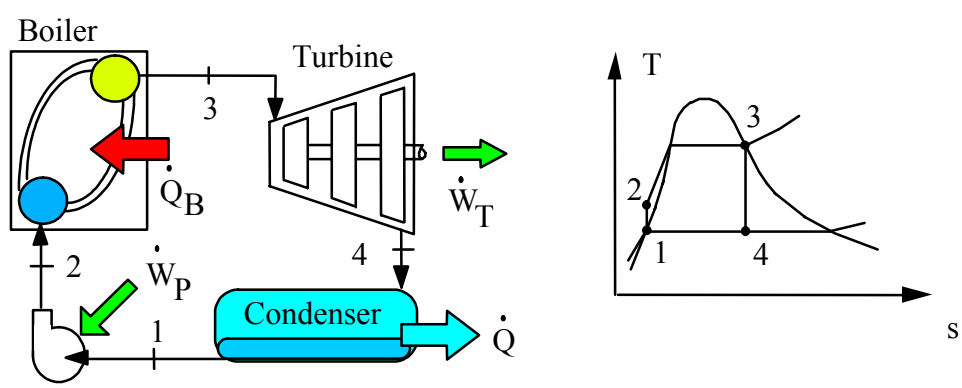

11.18

A steam power plant has a high pressure of 3 MPa and it maintains 60°C in the condenser. A condensing turbine is used, but the quality should not be lower than 90% at any state in the turbine. Find the specific work and heat transfer in all components and the cycle efficiency.

Solution:

Based on the standard Rankine cycle and Table B.1.

State 1: Sat. liquid. P_1 = 19.94 kPa, h_1 = 251.11 kJ/kg, v_1 = 0.001017 m^3/kg

Consider C.V. pump

Energy: $h_2 - h_1 = w_p = v_1 (P_2 - P_1) = 0.001017 (3000 – 19.94) =$ **3.03 kJ/kg**

State 2: P_2 = 3000 kPa, $h_2 = h_1 + w_p = 251.11 + 3.03 = 254.1$ kJ/kg

State 4: $P_4 = P_1$ = 19.94 kPa, x = 0.9

$$s_4 = s_f + x_4\, s_{fg} = 0.8311 + 0.9 \times 7.0784 = 7.20166 \text{ kJ/kg-K}$$

$$h_4 = h_f + x_4\, h_{fg} = 251.11 + 0.9 \times 2358.48 = 2373.74 \text{ kJ/kg}$$

Consider the turbine for which $s_4 = s_3$.

State 3: Table B.2.2 3000 kPa, s_3 = 7.20166 kJ/kg K => h_3 = 3432.5 kJ/kg

Boiler: $q_H = h_3 – h_2 = 3432.5 – 254.1 =$ **3178.4 kJ/kg**

Turbine: $w_T = h_3 – h_4 = 3432.5 – 2373.74 =$ **1058.8 kJ/kg**

Condenser: $q_L = h_4 – h = 2373.74 – 251.1 =$ **2122.6 kJ/kg**

Efficiency: $\eta_{TH} = w_{NET}/q_H = (w_T - w_P)/q_H = \dfrac{1058.8 - 3.03}{3178.4} =$ **0.332**

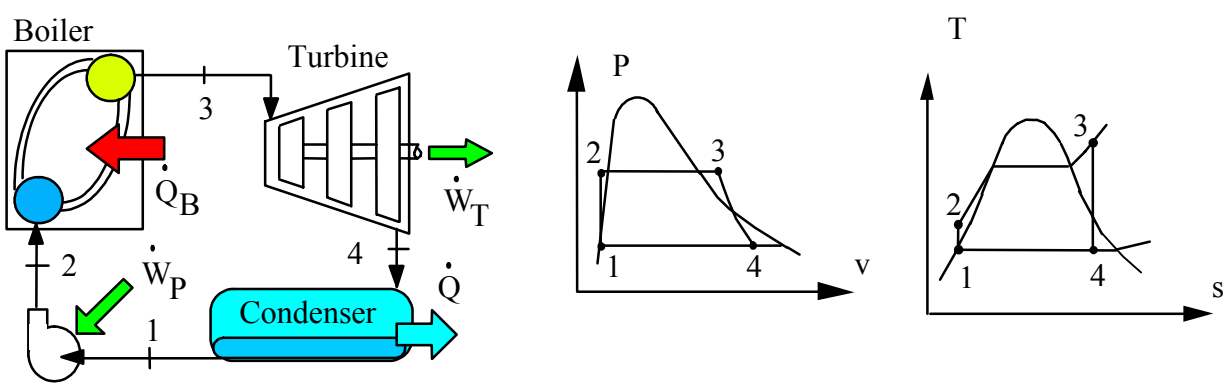

11.19

A low temperature power plant operates with R-410a maintaining -20°C in the condenser, a high pressure of 3 MPa with superheat. Find the temperature out of the boiler/superheater so the turbine exit temperature is 60°C and find the overall cycle efficiency.

State 1: $P_1 = 399.6$ kPa, $v_1 = 0.000803$ m^3/kg, $h_1 = 28.24$ kJ/kg

State 4: $P_4 = P_1 \approx 400$ kPa, $h_4 = 343.58$ kJ/kg, $s_4 = 1.3242$ kJ/kg-K

State 3: 3 MPa, $s = s_4$ ⇨ $h_3 = 426.56$ kJ/kg, $T_3 =$ **143.6^{o}C**

Pump: $w_p = v_1 (P_2 - P_1) = 0.000803 (3000 – 399.6) = 2.09$ kJ/kg

Boiler: $q_H = h_3 – h_2 = 426.56 – (28.24 + 2.09) = 396.23$ kJ/kg

Turbine: $w_T = h_3 – h_4 = 426.56 – 343.58 = 82.98$ kJ/kg

Efficiency: $\eta_{TH} = w_{NET}/q_H = (w_T - w_P)/q_H = \dfrac{82.98 - 2.09}{396.23} =$ **0.204**

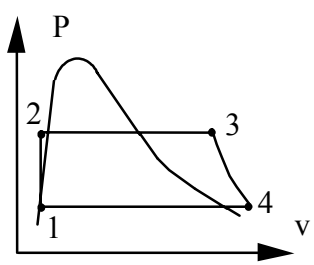

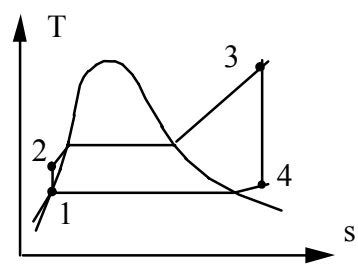

11.20

A steam power plant operating in an ideal Rankine cycle has a high pressure of 5 MPa and a low pressure of 15 kPa. The turbine exhaust state should have a quality of at least 95% and the turbine power generated should be 7.5 MW. Find the necessary boiler exit temperature and the total mass flow rate.

Solution:

C.V. Turbine assume adiabatic and reversible.

Energy: $w_T = h_3 - h_4$; Entropy: $s_4 = s_3$

Since the exit state is given we can relate that to the inlet state from entropy.

4: 15 kPa, $x_4 = 0.95$ => $s_4 = 7.6458$ kJ/kg K, $h_4 = 2480.4$ kJ/kg

3: $s_3 = s_4$, P_3 $\Rightarrow$ $h_3 = 4036.7$ kJ/kg, $T_3 =$ **758°C**

$w_T = h_3 - h_4 = 4036.7 - 2480.4 = 1556.3$ kJ/kg

$\dot{m} = \dot{W}_T/w_T = 7.5 \times 1000/1556.3 =$ **4.82 kg/s**

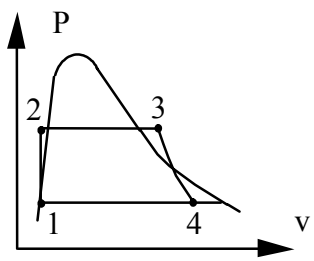

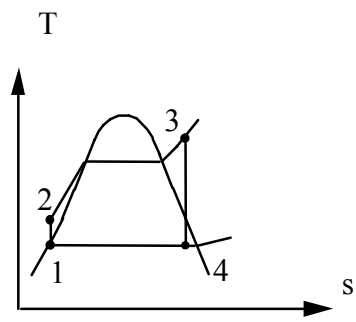

11.21

A supply of geothermal hot water is to be used as the energy source in an ideal Rankine cycle, with R-134a as the cycle working fluid. Saturated vapor R-134a leaves the boiler at a temperature of 85°C, and the condenser temperature is 40°C. Calculate the thermal efficiency of this cycle.

Solution:

CV: Pump (use R-134a Table B.5)

$$w_P = h_2 - h_1 = \int_1^2 vdP \approx v_1(P_2 - P_1)$$

$$= 0.000873(2926.2 - 1017.0) = 1.67 \text{ kJ/kg}$$

$$h_2 = h_1 + w_P = 256.54 + 1.67 = 258.21 \text{ kJ/kg}$$

CV: Boiler

$$q_H = h_3 - h_2 = 428.10 - 258.21 = 169.89 \text{ kJ/kg}$$

CV: Turbine

$$s_4 = s_3 = 1.6782 = 1.1909 + x_4 \times 0.5214 \quad => \quad x_4 = 0.9346$$

$$h_4 = 256.54 + 0.9346 \times 163.28 = 409.14 \text{ kJ/kg}$$

Energy Eq.: $w_T = h_3 - h_4 = 428.1 - 409.14 = 18.96$ kJ/kg

$$w_{NET} = w_T - w_P = 18.96 - 1.67 = 17.29 \text{ kJ/kg}$$

$$\eta_{TH} = w_{NET}/q_H = 17.29/169.89 = \mathbf{0.102}$$

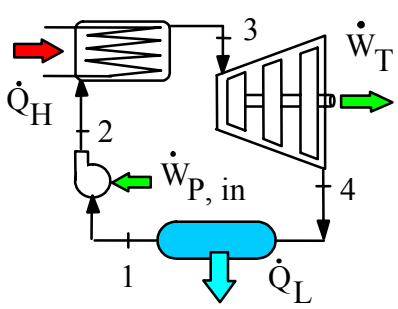

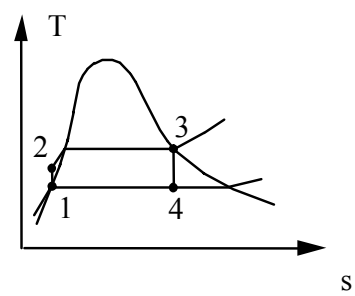

11.22

Do Problem 11.21 with R-410a as the working fluid and boiler exit at 4000 kPa, 70°C.

A supply of geothermal hot water is to be used as the energy source in an ideal Rankine cycle, with R-134a as the cycle working fluid. Saturated vapor R-134a leaves the boiler at a temperature of 85°C, and the condenser temperature is 40°C. Calculate the thermal efficiency of this cycle.

Solution:

CV: Pump (use R-410a Table B.4)

$$w_P = h_2 - h_1 = \int_1^2 vdP \approx v_1(P_2 - P_1) = 0.001025(4000 - 2420.7) = 1.619 \text{ kJ/kg}$$

$$h_2 = h_1 + w_P = 124.09 + 1.619 = 125.71 \text{ kJ/kg}$$

CV: Boiler: $q_H = h_3 - h_2 = 287.88 - 125.71 = 162.17$ kJ/kg

CV: Turbine

$$s_4 = s_3 = 0.93396 = 0.4473 + x_4 \times 0.5079, \Rightarrow \quad x_4 = 0.9582$$

$$h_4 = 124.09 + 0.9582 \times 159.04 = 276.48 \text{ kJ/kg}$$

$$w_T = h_3 - h_4 = 287.88 - 276.48 = 11.4 \text{ kJ/kg}$$

$$\eta_{TH} = w_{NET}/q_H = (11.4 - 1.62)/162.17 = \mathbf{0.060}$$

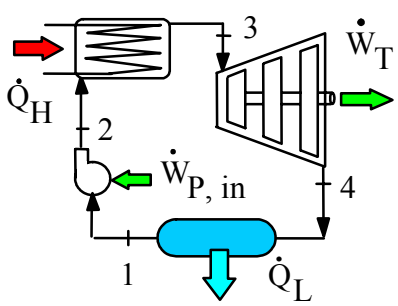

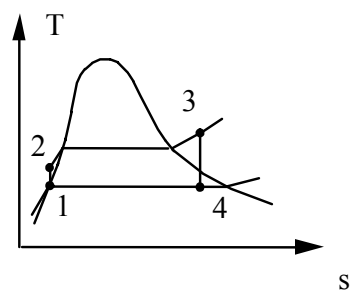

11.23

Do Problem 11.21 with ammonia as the working fluid.

A supply of geothermal hot water is to be used as the energy source in an ideal Rankine cycle, with R-134a as the cycle working fluid. Saturated vapor R-134a leaves the boiler at a temperature of 85°C, and the condenser temperature is 40°C. Calculate the thermal efficiency of this cycle.

Solution:

CV: Pump (use Ammonia Table B.2)

$$w_P = h_2 - h_1 = \int_1^2 vdP = v_1(P_2 - P_1)$$

$$= 0.001725(4608.6 - 1554.9) = 5.27 \text{ kJ/kg}$$

$$h_2 = h_1 + w_P = 371.43 + 5.27 = 376.7 \text{ kJ/kg}$$

CV: Boiler

$$q_H = h_3 - h_2 = 1447.8 - 376.7 = 1071.1 \text{ kJ/kg}$$

CV: Turbine

$$s_4 = s_3 = 4.3901 = 1.3574 + x_4 \times 3.5088 \quad \Rightarrow \quad x_4 = 0.8643$$

$$h_4 = 371.43 + 0.8643 \times 1098.8 = 1321.13 \text{ kJ/kg}$$

Energy Eq.:

$$w_T = h_3 - h_4 = 1447.8 - 1321.13 = 126.67 \text{ kJ/kg}$$

$$w_{NET} = w_T - w_P = 126.67 - 5.27 = 121.4 \text{ kJ/kg}$$

$$\eta_{TH} = w_{NET}/q_H = 121.4/1071.1 = \mathbf{0.113}$$

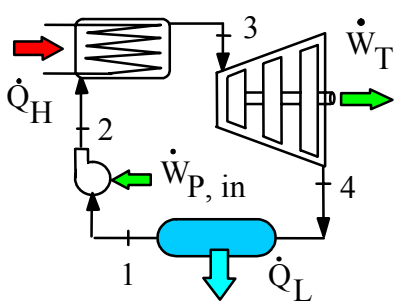

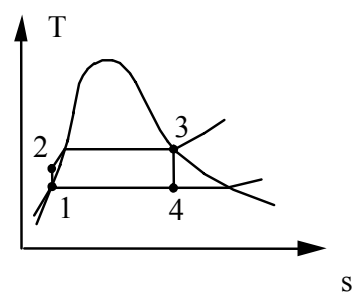

11.24

Consider the boiler in Problem 11.21 where the geothermal hot water brings the R-134a to saturated vapor. Assume a counter flowing heat exchanger arrangement. The geothermal water temperature should be equal to or greater than the R-134a temperature at any location inside the heat exchanger. The point with the smallest temperature difference between the source and the working fluid is called the pinch point. If 2 kg/s of geothermal water is available at 95°C, what is the maximum power output of this cycle for R-134a as the working fluid? (hint: split the heat exchanger C.V. into two so the pinch point with $\Delta T = 0$, T = 85°C appears).

2 kg/s of water is available at 95 °C for the boiler. The restrictive factor is the boiling temperature of 85° C. Therefore, break the process up from 2-3 into two parts as shown in the diagram.

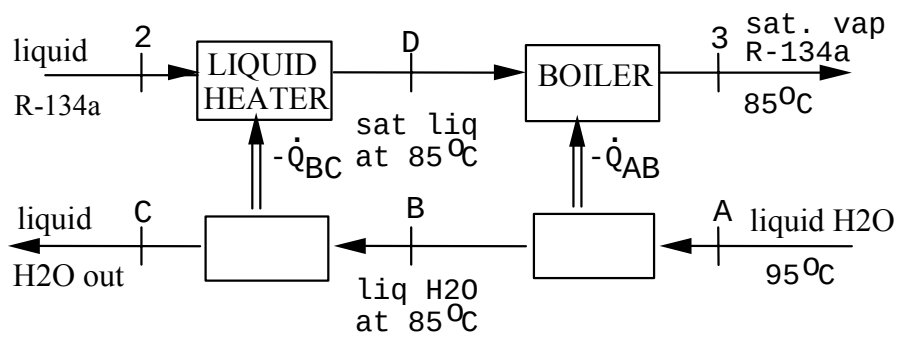

CV Pump: $w_P = v_1(P_2-P_1) = 0.000873(2926.2 - 1017.0) = 1.67$ kJ/kg

$h_2 = h_1 + w_P = 256.54 + 1.67 = 258.21$ kJ/kg

Write the energy equation for the first section A-B and D-3:

$$-\dot{Q}_{AB} = \dot{m}_{H2O}(h_A - h_B) = 2(397.94 - 355.88) = 84.12 \text{ kW}$$

$$= \dot{m}_{R134A}(428.1 - 332.65) \Rightarrow \dot{m}_{R134A} = 0.8813 \text{ kg/s}$$

To be sure that the boiling temp. is the restrictive factor, calculate T_C from the energy equation for the remaining section:

$$-\dot{Q}_{AC} = 0.8813(332.65 - 258.21) = 65.60 \text{ kW} = 2(355.88 - h_C)$$

$$\Rightarrow h_C = 323.1 \text{ kJ/kg}, \; T_C = 77.2°C > T_2 = 40°C \; \textbf{OK}$$

CV: Turbine: $s_4 = s_3 = 1.6782 = 1.1909 + x_4 \times 0.5214 \quad \Rightarrow \quad x_4 = 0.9346$

$h_4 = 256.54 + 0.9346 \times 163.28 = 409.14$ kJ/kg

Energy Eq.: $w_T = h_3 - h_4 = 428.1 - 409.14 = 18.96$ kJ/kg

Cycle: $w_{NET} = w_T - w_P = 18.96 - 1.67 = 17.29$ kJ/kg

$$\dot{W}_{NET} = \dot{m}_{R134A} w_{NET} = 0.8813 \times 17.29 = \mathbf{15.24\ kW}$$

11.25

Do the previous problem with ammonia as the working fluid.

A flow with 2 kg/s of water is available at 95°C for the boiler. The restrictive factor is the boiling temperature of 85°C. Therefore, break the process up from 2-3 into two parts as shown in the diagram.

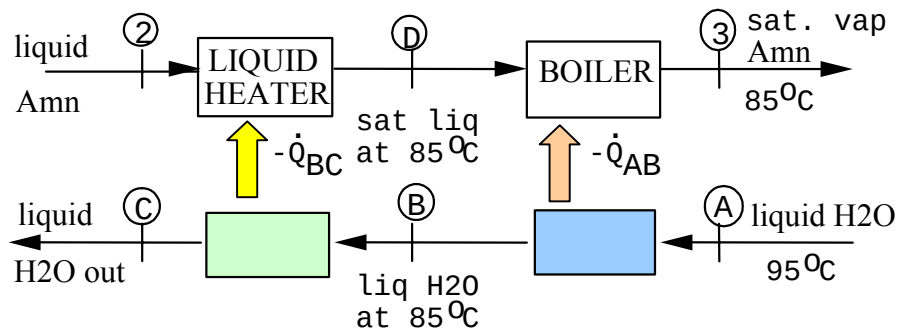

State 1: 40^oC, 1554.9 kPa, $v_1 = 0.001725\ m^3/kg$

CV Pump: $w_P = v_1(P_2 - P_1) = 0.001725(4608.6 - 1554.9) = 5.27$ kJ/kg

$h_2 = h_1 + w_P = 371.43 + 5.27 = 376.7$ kJ/kg

$$-\dot{Q}_{AB} = \dot{m}_{H2O}(h_A - h_B) = 2(397.94 - 355.88) = 84.12 \text{ kW}$$

$$= \dot{m}_{amn}(1447.8 - 609.21) \Rightarrow \dot{m}_{amn} = 0.100 \text{ kg/s}$$

To verify that $T_D = T_3$ is the restrictive factor, find T_C.

$$-\dot{Q}_{AC} = 0.100(609.21 - 376.7) = 23.25 = 2.0(355.88 - h_C)$$

$h_C = 344.25$ kJ/kg $\Rightarrow$ $T_C = 82.5^oC > T_2 = 40^oC$ **OK**

CV: Turbine

$s_4 = s_3 = 4.3901 = 1.3574 + x_4 \times 3.5088$ => $x_4 = 0.8643$

$h_4 = 371.43 + 0.8643 \times 1098.8 = 1321.13$ kJ/kg

Energy Eq.:

$w_T = h_3 - h_4 = 1447.8 - 1321.13 = 126.67$ kJ/kg

$w_{NET} = w_T - w_P = 126.67 - 5.27 = 121.4$ kJ/kg

$\dot{W}_{NET} = \dot{m}_{amn} w_{NET} = 0.1 \times 121.4 =$ **12.14 kW**

11.26

A low temperature power plant operates with carbon dioxide maintaining -10°C in the condenser, a high pressure of 6 MPa and it superheats to 100°C. Find the turbine exit temperature and the overall cycle efficiency.

State 1: $v_1 = 0.001017\ m^3/kg$, $h_1 = 63.62$ kJ/kg, $P_1 = 2648.7$ kPa

State 3: $h_3 = 421.69$ kJ/kg, $s_3 = 1.4241$ kJ/kg-K

State 4: (2648.7 kPa, $s = s_3$) $h_4 = 372.5$ kJ/kg interpolated sup. vap.

C.V. Pump: $w_P = \int v\, dP = v_1(P_2 - P_1) = 0.001017\ (6000 - 2648.7) =$ **3.408 kJ/kg**

$\Rightarrow\ h_2 = h_1 + w_P = 63.62 + 3.408 = 67.03$ kJ/kg

C.V. Boiler: $q_H = h_3 - h_2 = 421.69 - 67.03 =$ **354.66 kJ/kg**

C.V. Tubine: Energy: $w_{T,s} = h_3 - h_4 = 445.09 - 385.97 =$ **59.12 kJ/kg**

$$\eta_{CYCLE} = w_{NET}/q_H = \frac{59.12 - 1.881}{385.45} = \mathbf{0.148}$$

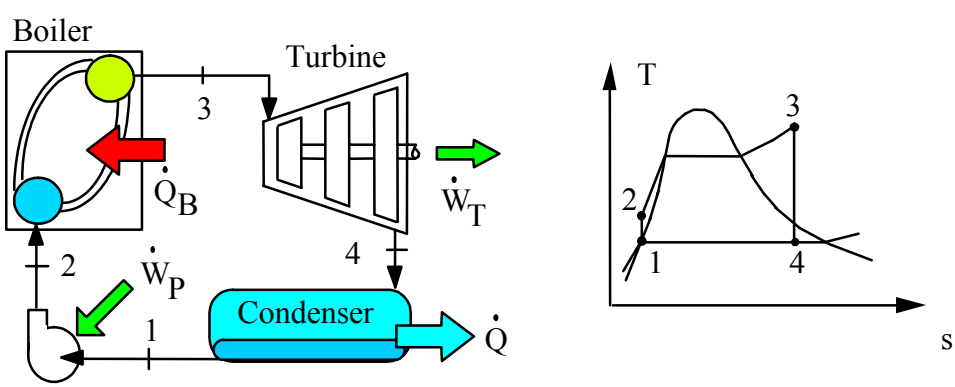

11.27

Consider the ammonia Rankine-cycle power plant shown in Fig. P11.27. The plant was designed to operate in a location where the ocean water temperature is 25°C near the surface and 5°C at some greater depth. The mass flow rate of the working fluid is 1000 kg/s.

a. Determine the turbine power output and the pump power input for the cycle.
b. Determine the mass flow rate of water through each heat exchanger.
c. What is the thermal efficiency of this power plant?

Solution:

a) C.V. Turbine. Assume reversible and adiabatic.

$$s_2 = s_1 = 5.0863 = 0.8779 + x_2 \times 4.3269 \quad \Rightarrow \quad x_2 = 0.9726$$

$$h_2 = 227.08 + 0.9726 \times 1225.09 = 1418.6 \text{ kJ/kg}$$

$$w_T = h_1 - h_2 = 1460.29 - 1418.6 = 41.69 \text{ kJ/kg}$$

$$\dot{W}_T = \dot{m}w_T = 1000 \times 41.69 = \mathbf{41\ 690\ kW}$$

Pump: $w_P \approx v_3(P_4 - P_3) = 0.0016(857 - 615) = 0.387$ kJ/kg

$$\dot{W}_P = \dot{m}w_P = 1000 \times 0.387 = \mathbf{387\ kW}$$

b) Consider condenser heat transfer to the low T water

$$\dot{Q}_{\text{to low T H2O}} = 1000(1418.6 - 227.08) = 1.1915\times10^6 \text{ kW}$$

$$\dot{m}_{\text{low T H2O}} = \frac{1.1915\times10^6}{29.38 - 20.98} = \mathbf{141\ 850\ kg/s}$$

$$h_4 = h_3 + w_P = 227.08 + 0.39 = 227.47 \text{ kJ/kg}$$

Now consider the boiler heat transfer from the high T water

$$\dot{Q}_{\text{from high T H2O}} = 1000(1460.29 - 227.47) = 1.2328\times10^6 \text{ kW}$$

$$\dot{m}_{\text{high T H2O}} = \frac{1.2328\times10^6}{104.87 - 96.50} = \mathbf{147\ 290\ kg/s}$$

c) $$\eta_{TH} = \dot{W}_{NET}/\dot{Q}_H = \frac{41\ 690 - 387}{1.2328\times10^6} = \mathbf{0.033}$$

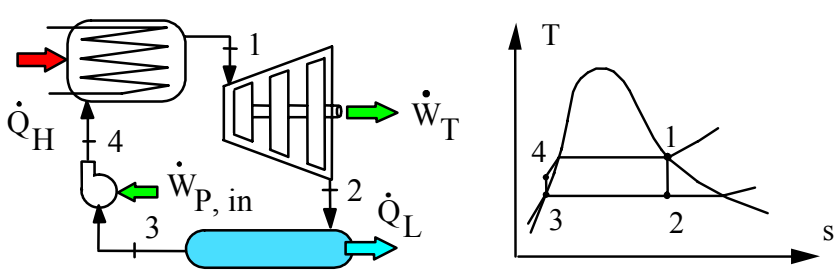

11.28

Do problem 11.27 with carbon dioxide as the working fluid.

Consider the ammonia Rankine-cycle power plant shown in Fig. P11.27. The plant was designed to operate in a location where the ocean water temperature is 25°C near the surface and 5°C at some greater depth. The mass flow rate of the working fluid is 1000 kg/s.

a. Determine the turbine power output and the pump power input for the cycle.
b. Determine the mass flow rate of water through each heat exchanger.
c. What is the thermal efficiency of this power plant?

Solution:

a) C.V. Turbine. Assume reversible and adiabatic.

$$s_2 = s_1 = 1.0406 = 0.4228 + x_2 \times 0.6963 \quad \Rightarrow \quad x_2 = 0.88726$$

$$h_2 = 112.83 + 0.88726 \times 197.15 = 287.75 \text{ kJ/kg}$$

$$w_T = h_1 - h_2 = 294.96 - 287.75 = 7.206 \text{ kJ/kg}$$

$$\dot{W}_T = \dot{m}w_T = 1000 \times 7.206 = \mathbf{7\ 206\ kW}$$

Pump: $w_P \approx v_3(P_4 - P_3) = 0.001161(5729 - 4502) = 1.425$ kJ/kg

$$\dot{W}_P = \dot{m}w_P = 1000 \times 1.425 = \mathbf{1425\ kW}$$

b) Consider condenser heat transfer to the low T water

$$\dot{Q}_{\text{to low T H2O}} = 1000(287.75 - 112.83) = 0.2749 \times 10^6 \text{ kW}$$

$$\dot{m}_{\text{low T H2O}} = \frac{0.2749 \times 10^6}{29.38 - 20.98} = \mathbf{32\ 728\ kg/s}$$

$$h_4 = h_3 + w_P = 112.83 + 1.425 = 114.26 \text{ kJ/kg}$$

Now consider the boiler heat transfer from the high T water

$$\dot{Q}_{\text{from high T H2O}} = 1000(294.96 - 114.26) = 0.1807 \times 10^6 \text{ kW}$$

$$\dot{m}_{\text{high T H2O}} = \frac{0.1807 \times 10^6}{104.87 - 96.50} = \mathbf{21\ 589\ kg/s}$$

c) $$\eta_{TH} = \dot{W}_{NET}/\dot{Q}_H = \frac{7\ 206 - 1425}{0.1807 \times 10^6} = \mathbf{0.032}$$

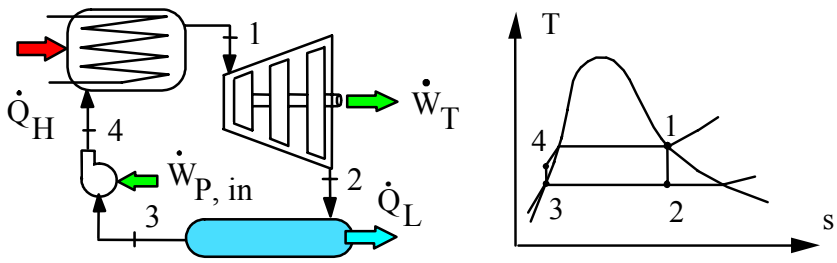

11.29

A smaller power plant produces 25 kg/s steam at 3 MPa, 600°C in the boiler. It cools the condenser with ocean water coming in at 12°C and returned at 15°C so the condenser exit is at 45°C. Find the net power output and the required mass flow rate of ocean water.

Solution:

The states properties from Tables B.1.1 and B.1.3

1: 45°C, x = 0: h_1 = 188.42 kJ/kg, v_1 = 0.00101 m^3/kg, P_{sat} = 9.59 kPa

3: 3.0 MPa, 600°C: h_3 = 3682.34 kJ/kg, s_3 = 7.5084 kJ/kg K

C.V. Pump Reversible and adiabatic.

Energy: $w_p = h_2 - h_1$; Entropy: $s_2 = s_1$

since incompressible it is easier to find work (positive in) as

$w_p = \int v\, dP = v_1 (P_2 - P_1) = 0.00101\ (3000 - 9.6) = 3.02$ kJ/kg

C.V. Turbine : $w_T = h_3 - h_4$; $s_4 = s_3$

$s_4 = s_3 = 7.5084 = 0.6386 + x_4\ (7.5261)$ => $x_4 = 0.9128$

=> $h_4 = 188.42 + 0.9128\ (2394.77) = 2374.4$ kJ/kg

$w_T = 3682.34 - 2374.4 = 1307.94$ kJ/kg

$\dot{W}_{NET} = \dot{m}(w_T - w_p) = 25\ (1307.94 - 3.02) =$ **32.6 MW**

C.V. Condenser : $q_L = h_4 - h_1 = 2374.4 - 188.42 = 2186$ kJ/kg

$\dot{Q}_L = \dot{m} q_L = 25 \times 2186 = 54.65$ MW $= \dot{m}_{ocean}\, C_p\, \Delta T$

$\dot{m}_{ocean} = \dot{Q}_L / C_p\, \Delta T = 54\,650 / (4.18 \times 3) =$ **4358 kg/s**

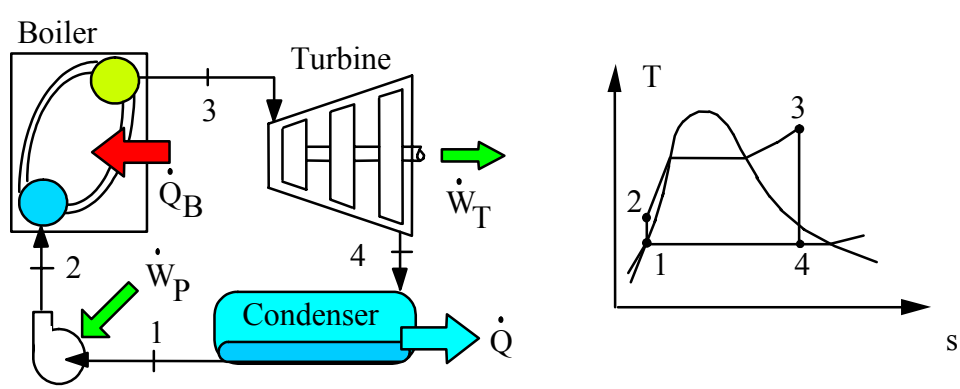

11.30

The power plant in Problem 11.13 is modified to have a super heater section following the boiler so the steam leaves the super heater at 3.0 MPa, 400°C. Find the specific work and heat transfer in each of the ideal components and the cycle efficiency.

Solution:

C.V. Pump: $w_P = \int v\, dP = v_1(P_2 - P_1) = 0.00101(3000 - 10) =$ **3.02 kJ/kg**

$$\Rightarrow h_2 = h_1 + w_P = 191.81 + 3.02 = 194.83 \text{ kJ/kg}$$

C.V. Boiler: $q_H = h_3 - h_2 = 3230.82 - 194.83 =$ **3036 kJ/kg**

C.V. Tubine: Energy: $w_{T,s} = h_3 - h_4$;

Entropy: $s_4 = s_3 = 6.9211$ kJ/kg K

$$\Rightarrow x_4 = \frac{s_4 - s_f}{s_{fg}} = \frac{6.9211 - 0.6492}{7.501} = 0.83614 \;;$$

$$h_4 = 191.81 + 0.83614 \times 2392.82 = 2192.5 \text{ kJ/kg}$$

$w_{T,s} = 3230.82 - 2192.5 =$ **1038.3 kJ/kg**

C.V. Condenser: $q_C = h_4 - h_1 = 2192.5 - 191.81 =$ **2000.7 kJ/kg**

$$\eta_{CYCLE} = w_{NET}/q_H = \frac{1038.3 - 3.02}{3036} = \mathbf{0.341}$$

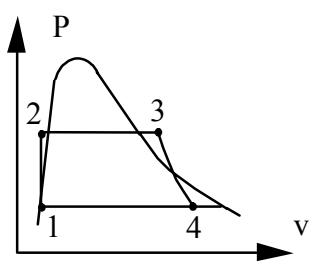

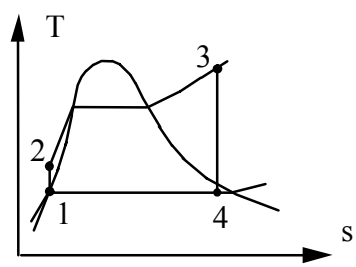

11.31

Consider an ideal Rankine cycle using water with a high-pressure side of the cycle at a supercritical pressure. Such a cycle has a potential advantage of minimizing local temperature differences between the fluids in the steam generator, such as the instance in which the high-temperature energy source is the hot exhaust gas from a gas-turbine engine. Calculate the thermal efficiency of the cycle if the state entering the turbine is 30 MPa, 550°C, and the condenser pressure is 10 kPa. What is the steam quality at the turbine exit?

Solution:

For the efficiency we need the net work and steam generator heat transfer.

C.V. Pump. For this high exit pressure we use Table B.1.2, pg. 781

State 1: $s_1 = 0.6492$ kJ/kg K, $h_1 = 191.81$ kJ/kg

Entropy Eq.: $s_2 = s_1$ => $h_2 = 222.5$ kJ/kg

$w_p = h_2 - h_1 = 30.69$ kJ/kg

C.V. Turbine. Assume reversible and adiabatic.

Entropy Eq.: $s_4 = s_3 = 6.0342 = 0.6492 + x_4 \times 7.501$

$x_4 = \mathbf{0.7179}$ Very low for a turbine exhaust

$h_4 = 191.81 + x_4 \times 2392.82 = 1909.63$, $h_3 = 3275.36$ kJ/kg

$w_T = h_3 - h_4 = 1365.7$ kJ/kg

Steam generator: $q_H = h_3 - h_2 = 3052.9$ kJ/kg

$w_{NET} = w_T - w_p = 1365.7 - 30.69 = 1335$ kJ/kg

$\eta = w_{NET}/q_H = 1335 / 3052.9 = \mathbf{0.437}$

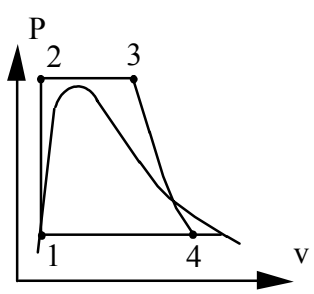

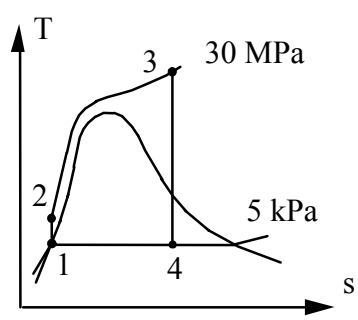

11.32

Find the mass flow rate in Problem 11.26 so the turbine can produce 1 MW.

A low temperature power plant operates with carbon dioxide maintaining -10°C in the condenser, a high pressure of 6 MPa and it superheats to 100°C. Find the turbine exit temperature and the overall cycle efficiency.

State 3: h_3 = 421.69 kJ/kg, s_3 = 1.4241 kJ/kg-K

State 4: (800 kPa, s = s_3) h_4 = 385.97 kJ/kg interpolated sup. vap.

C.V. Tubine: Energy: $w_{T,s} = h_3 - h_4 = 445.09 - 385.97 = 59.12$ kJ/kg

$\dot{m} = \dot{W}_{T,s} / w_{T,s}$ = 1000 kW/ 59.12 kJ/kg = **16.9 kg/s**

Reheat Cycles

11.33

A smaller power plant produces steam at 3 MPa, 600°C in the boiler. It keeps the condenser at 45°C by transfer of 10 MW out as heat transfer. The first turbine section expands to 500 kPa and then flow is reheated followed by the expansion in the low pressure turbine. Find the reheat temperature so the turbine output is saturated vapor. For this reheat find the total turbine power output and the boiler heat transfer.

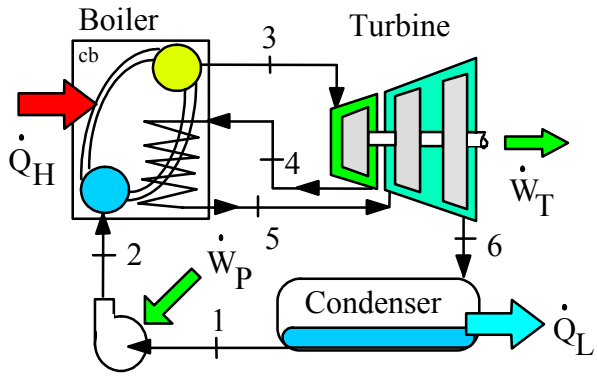

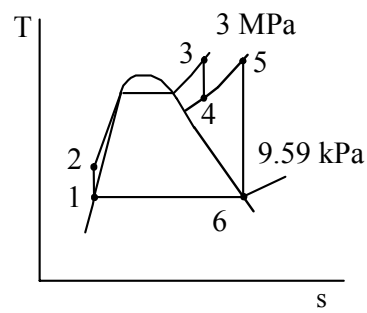

The states properties from Tables B.1.1 and B.1.3

1: 45°C, x = 0: h_1 = 188.42 kJ/kg, v_1 = 0.00101 m^3/kg, P_{sat} = 9.59 kPa

3: 3.0 MPa, 600°C: h_3 = 3682.34 kJ/kg, s_3 = 7.5084 kJ/kg K

6: 45°C, x = 1: h_6 = 2583.19 kJ/kg, s_6 = 8.1647 kJ/kg K

C.V. Pump Reversible and adiabatic.

Energy: $w_p = h_2 - h_1$; Entropy: $s_2 = s_1$

since incompressible it is easier to find work (positive in) as

$w_p = \int v\, dP = v_1 (P_2 - P_1) = 0.00101\ (3000 - 9.59) = 3.02$ kJ/kg

$h_2 = h_1 + w_p = 188.42 + 3.02 = 191.44$ kJ/kg

C.V. HP Turbine section

Entropy Eq.: $s_4 = s_3$ => h_4 = 3093.26 kJ/kg; T_4 = 314°C

C.V. LP Turbine section

Entropy Eq.: $s_6 = s_5$ = 8.1647 kJ/kg K => state 5

State 5: 500 kPa, s_5 => h_5 = 3547.55 kJ/kg, T_5 = **529°C**

C.V. Condenser.

Energy Eq.: $q_L = h_6 - h_1 = h_{fg} = 2394.77$ kJ/kg

$\dot{m} = \dot{Q}_L / q_L = 10\,000 / 2394.77 = 4.176$ kg/s

Both turbine sections

$\dot{W}_{T,tot} = \dot{m} w_{T,tot} = \dot{m}(h_3 - h_4 + h_5 - h_6)$

$= 4.176\ (3682.34 - 3093.26 + 3547.55 - 2583.19) =$ **6487 kW**

Both boiler sections

$\dot{Q}_H = \dot{m}(h_3 - h_2 + h_5 - h_4)$

$= 4.176\ (3682.34 - 191.44 + 3547.55 - 3093.26) =$ **16 475 kW**

11.34

A smaller power plant produces 25 kg/s steam at 3 MPa, 600°C in the boiler. It cools the condenser with ocean water so the condenser exit is at 45°C. There is a reheat done at 500 kPa up to 400°C and then expansion in the low pressure turbine. Find the net power output and the total heat transfer in the boiler.

Solution:

The states properties from Tables B.1.1 and B.1.3

1: 45°C, x = 0: h_1 = 188.42 kJ/kg, v_1 = 0.00101 m^3/kg, P_{sat} = 9.59 kPa

3: 3.0 MPa, 600°C: h_3 = 3682.34 kJ/kg, s_3 = 7.5084 kJ/kg K

5: 500 kPa, 400°C: h_5 = 3271.83 kJ/kg, s_5 = 7.7937 kJ/kg K

C.V. Pump Reversible and adiabatic. Incompressible flow so

Energy: $w_p = h_2 - h_1 = v_1(P_2 - P_1) = 0.00101\ (3000 - 9.6) = 3.02$ kJ/kg

C.V. LP Turbine section

Entropy Eq.: $s_6 = s_5 = 7.7937$ kJ/kg K => two-phase state

$$x_6 = (s_6 - s_f)/s_{fg} = \frac{7.7937 - 0.6386}{7.5261} = 0.9507$$

$$h_6 = 188.42 + 0.9507 \times 2394.77 = 2465.1 \text{ kJ/kg}$$

Both turbine sections

$$w_{T,tot} = h_3 - h_4 + h_5 - h_6$$

$$= 3682.34 - 3093.26 + 3271.83 - 2465.1 = 1395.81 \text{ kJ/kg}$$

$$\dot{W}_{net} = \dot{W}_T - \dot{W}_p = \dot{m}(w_{T,tot} - w_p) = 25\ (1395.81 - 3.02) = \mathbf{34\ 820\ kW}$$

Both boiler sections

$$\dot{Q}_H = \dot{m}(h_3 - h_2 + h_5 - h_4)$$

$$= 25\ (3682.34 - 191.44 + 3271.83 - 3093.26) = \mathbf{91\ 737\ kW}$$

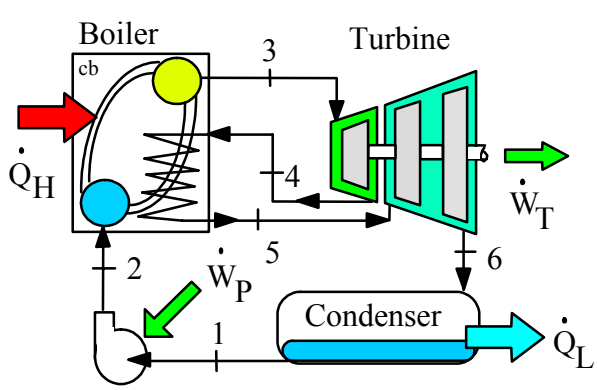

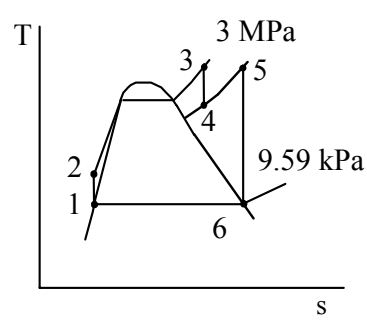

11.35

Consider the supercritical cycle in problem 11.31 and assume the turbine first expands to 3 MPa then a reheat to 500°C with a further expansion in the low pressure turbine to 10 kPa. Find the combined specific turbine work and the total specific heat transfer in the boiler.

For the efficiency we need the net work and steam generator heat transfer.

C.V. Pump. For this high exit pressure we use Table B.1.4

State 1: $s_1 = 0.6492$ kJ/kg K, $h_1 = 191.81$ kJ/kg

Entropy Eq.: $s_2 = s_1$ => $h_2 = 222.5$ kJ/kg

State 3: $h_3 = 3275.36$ kJ/kg, $s_3 = 6.0342$ kJ/kg-K

C.V. Turbine section 1. Assume reversible and adiabatic.

Entropy Eq.: $s_4 = s_3 = 6.0342 = 2.6456 + x_4 \times 3.5412$, $x_4 = 0.956907$

$h_4 = 1008.41 + x_4 \times 1795.73 = 2726.76$ kJ/kg,

State 5: $h_5 = 3456.48$ kJ/kg, $s_5 = 7.2337$ kJ/kg-K

C.V. Turbine section 2. Assume reversible and adiabatic.

Entropy Eq.: $s_6 = s_5 = 7.2337 = 0.6492 + x_6 \times 7.501$, $x_6 = 0.87782$

$h_6 = 191.81 + x_6 \times 2392.82 = 2292.27$ kJ/kg

Steam generator: $q_H = h_3 - h_2 + h_5 - h_4$

$= 3275.36 - 222.5 + 3456.48 - 2726.76$

$= 3052.86 + 729.72 =$ **3782.6 kJ/kg**

Turbine: $w_T = h_3 - h_4 + h_5 - h_6$

$= 3275.36 - 2726.76 + 3456.48 - 2292.27$

$= 548.6 + 1164.21 =$ **1712.8 kJ/kg**

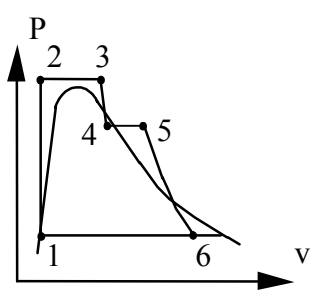

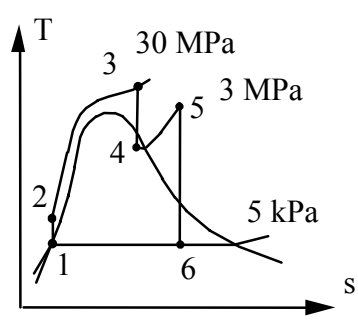

11.36

Consider an ideal steam reheat cycle where steam enters the high-pressure turbine at 3.0 MPa, 400°C, and then expands to 0.8 MPa. It is then reheated to 400°C and expands to 10 kPa in the low-pressure turbine. Calculate the cycle thermal efficiency and the moisture content of the steam leaving the low-pressure turbine.

Solution:

C.V. Pump reversible, adiabatic and assume incompressible flow

$w_P = v_1(P_2 - P_1) = 0.00101(3000 - 10) = 3.02$ kJ/kg,

$h_2 = h_1 + w_P = 191.81 + 3.02 = 194.83$ kJ/kg

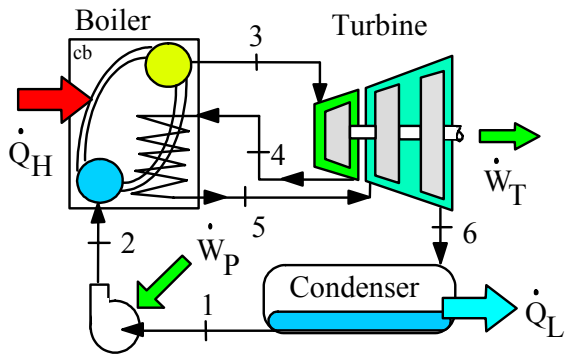

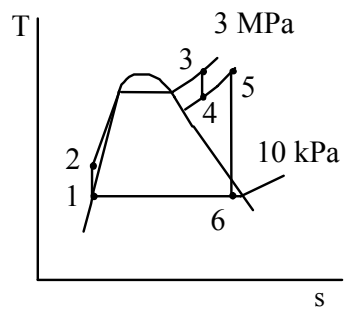

C.V. HP Turbine section

$P_3 = 3$ MPa, $T_3 = 400^oC$ => $h_3 = 3230.82$ kJ/kg, $s_3 = 6.9211$ kJ/kg K

$s_4 = s_3$ => $h_4 = 2891.6$ kJ/kg;

C.V. LP Turbine section

State 5: 400^oC, 0.8 MPa => $h_5 = 3267.1$ kJ/kg, $s_5 = 7.5715$ kJ/kg K

Entropy Eq.: $s_6 = s_5 = 7.5715$ kJ/kg K => two-phase state

$$x_6 = \frac{s_6 - s_f}{s_{fg}} = \frac{7.5715 - 0.6492}{7.501} = 0.92285 = \mathbf{0.923}$$

$h_6 = 191.81 + 0.92285 \times 2392.82 = 2400$ kJ/kg

$w_{T,tot} = h_3 - h_4 + h_5 - h_6 = 3230.82 - 2891.6 + 3267.1 - 2400 = 1237.8$ kJ/kg

$q_{H1} = h_3 - h_2 = 3230.82 - 194.83 = 3036$ kJ/kg

$q_H = q_{H1} + h_5 - h_4 = 3036 + 3267.1 - 2891.6 = 3411.5$ kJ/kg

$\eta_{CYCLE} = (w_{T,tot} - w_P)/q_H = (1237.8 - 3.02)/3411.5 = \mathbf{0.362}$

11.37

The reheat pressure affects the operating variables and thus turbine performance. Repeat Problem 11.33 twice, using 0.6 and 1.0 MPa for the reheat pressure.

Solution

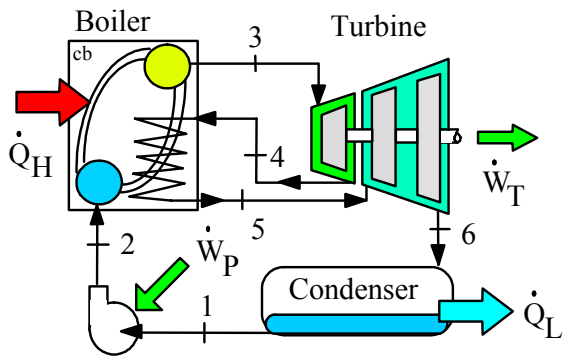

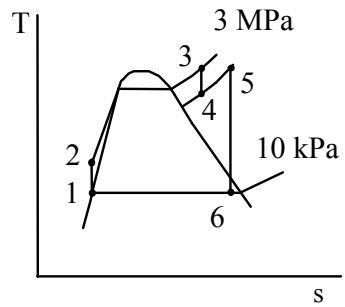

C.V. Pump reversible, adiabatic and assume incompressible flow

$w_P = v_1(P_2 - P_1) = 0.00101(3000 - 10) = 3.02$ kJ/kg,

$h_2 = h_1 + w_P = 191.81 + 3.02 = 194.83$ kJ/kg

State 3: 3 MPa, 400°C => $h_3 = 3230.82$ kJ/kg, $s_3 = 6.9211$ kJ/kg K

Low T boiler section: $q_{H1} = h_3 - h_2 = 3230.82 - 194.83 = 3035.99$ kJ/kg

State 4: P_4, $s_4 = s_3$

For $P_4 = 1$ MPa: $h_4 = 2940.85$ kJ/kg state 4 is sup. vapor

State 5: 400°C, $P_5 = P_4$ => $h_5 = 3263.9$ kJ/kg, $s_5 = 7.465$ kJ/kg K,

For $P_4 = 0.6$ MPa: $h_4 = 2793.2$ kJ/kg state 4 is sup. vapor

State 5: 400°C, $P_5 = P_4$ => $h_5 = 3270.3$ kJ/kg, $s_5 = 7.7078$ kJ/kg K,

State 6: 10 kPa, $s_6 = s_5$ => $x_6 = (s_6 - s_f)/s_{fg}$

Total turbine work: $w_{T,tot} = h_3 - h_4 + h_5 - h_6$

Total boiler H.Tr.: $q_H = q_{H1} + h_5 - h_4$

Cycle efficiency: $\eta_{CYCLE} = (w_{T,tot} - w_P)/q_H$

$P_4=P_5$	x_6	h_6	w_T	q_H	η_{CYCLE}
1	0.9087	2366	1187.9	3359.0	0.3527
0.6	0.9410	2443.5	1228.0	3437.7	0.3563

Notice the very small changes in efficiency.

11.38

The effect of a number of reheat stages on the ideal steam reheat cycle is to be studied. Repeat Problem 11.33 using two reheat stages, one stage at 1.2 MPa and the second at 0.2 MPa, instead of the single reheat stage at 0.8 MPa.

C.V. Pump reversible, adiabatic and assume incompressible flow, work in

$w_P = v_1(P_2 - P_1) = 0.00101(3000 - 10) = 3.02$ kJ/kg,

$h_2 = h_1 + w_P = 191.81 + 3.02 = 194.83$ kJ/kg

$P_4 = P_5 = 1.2$ MPa, $P_6 = P_7 = 0.2$ MPa

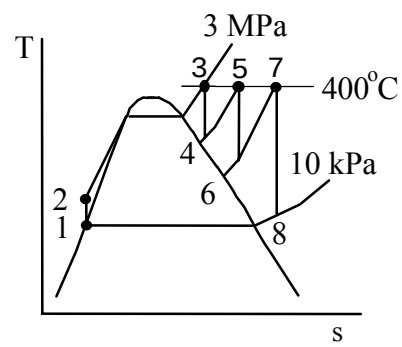

3: $h_3 = 3230.82$ kJ/kg, $s_3 = 6.9211$ kJ/kg K

4: P_4, $s_4 = s_3 \Rightarrow$ sup. vap. $h_4 = 2985.3$

5: $h_5 = 3260.7$ kJ/kg, $s_5 = 7.3773$ kJ/kg K

6: P_6, $s_6 = s_5 \Rightarrow$ sup. vapor

$h_6 = 2811.2$ kJ/kg

7: $h_7 = 3276.5$ kJ/kg, $s_7 = 8.2217$ kJ/kg K

8: P_8, $s_8 = s_7 \Rightarrow$ sup. vapor $h_8 = 2607.9$ kJ/kg

Total turbine work, same flow rate through all sections

$w_T = (h_3 - h_4) + (h_5 - h_6) + (h_7 - h_8) = 245.5 + 449.5 + 668.6 = 1363.6$ kJ/kg

Total heat transfer in boiler, same flow rate through all sections

$q_H = (h_3 - h_2) + (h_5 - h_4) + (h_7 - h_6) = 3036 + 319.8 + 465.3 = 3821.1$ kJ/kg

Cycle efficiency: $\eta_{TH} = \dfrac{w_T - w_P}{q_H} = \dfrac{1363.6 - 3.02}{3821.1} = \mathbf{0.356}$

Open Feedwater Heaters

11.39

A power plant for a polar expedition uses ammonia and the boiler exit is 80°C, 1000 kPa and the condenser operates at -15°C. A single open "feed water" heater operates at 400 kPa with an exit state of saturated liquid. Find the mass fraction extracted in the turbine.

CV Feedwater heater.

States given and fixed from knowing Fig. 11.10:

5: $h_5 = 1614.6$ kJ/kg, $s_5 = 5.4971$ kJ/kgK

3: $h_3 = 171.226$ kJ/kg

1: $h_1 = 111.66$ kJ/kg, $v_1 = 0.001519$ m^3/kg

Analyze the pump: $h_2 = h_1 + w_{P1} = h_1 + v_1 (P_2 - P_1)$

$= 111.66 + 0.001519 \text{ m}^3/\text{kg} \times (400 - 236.3) \text{ kPa}$

$= 111.909$ kJ/kg

Analyze the turbine: 6: 400 kPa, $s_6 = s_1$ => $h_6 = 1479.6$ kJ/kg

Analyze the FWH leads to Eq.11.5:

$$x = \frac{h_3 - h_2}{h_6 - h_2} = \frac{171.226 - 111.909}{1479.6 - 11.909} = \mathbf{0.0434}$$

11.40

An open feedwater heater in a regenerative steam power cycle receives 20 kg/s of water at 100°C, 2 MPa. The extraction steam from the turbine enters the heater at 2 MPa, 275°C, and all the feedwater leaves as saturated liquid. What is the required mass flow rate of the extraction steam?

Solution:

The complete diagram is as in Figure 11.10 in main text.

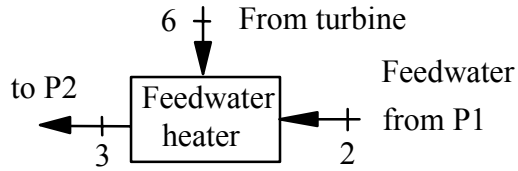

C.V Feedwater heater

Continuity Eq.: $\dot{m}_2 + \dot{m}_6 = \dot{m}_3$

Energy Eq.: $\dot{m}_2 h_2 + \dot{m}_6 h_6 = \dot{m}_3 h_3 = (\dot{m}_2 + \dot{m}_6)\, h_3$

Table B.1.4: $h_2 = 420.45$ kJ/kg, Table B.1.2: $h_3 = 908.77$ kJ/kg

Table B.1.3: $h_6 = 2963$ kJ/kg, this is interpolated

With the values substituted into the energy equation we get

$$\dot{m}_6 = \dot{m}_2 \frac{h_3 - h_2}{h_6 - h_3} = 20 \times \frac{908.77 - 420.45}{2963 - 908.77} = \mathbf{4.754\ kg/s}$$

Remark: For lower pressures at state 2 where Table B.1.4 may not have an entry the corresponding saturated liquid at same T from Table B.1.1 is used.

11.41

A low temperature power plant operates with R-410a maintaining -20°C in the condenser, a high pressure of 3 MPa with superheat to 80°C. There is one open "feed water" heater operating at 800 kPa with an exit as saturated liquid at 0°C. Find the extraction fraction of the flow out of the turbine and the turbine work per unit mass flowing through the boiler.

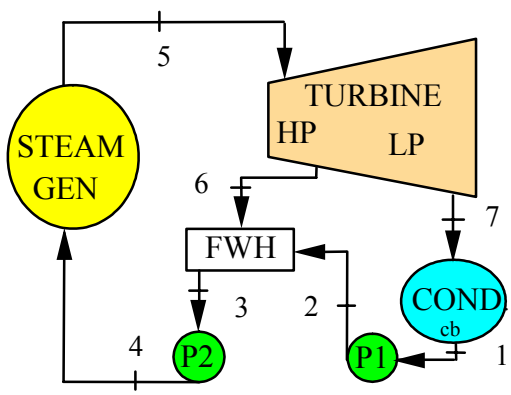

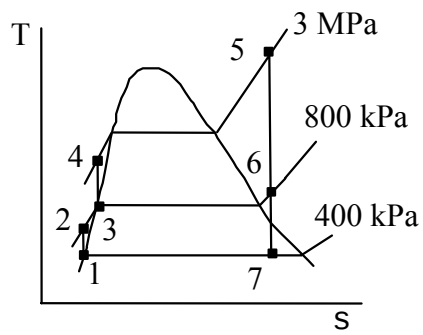

State 1: $x_1 = 0$, $h_1 = 28.24$ kJ/kg, $v_1 = 0.000803$ m^3/kg

State 3: $x_3 = 0$, $h_3 = 57.76$ kJ/kg, $v_3 = 0.000855$ m^3/kg

State 5: $h_5 = 329.1$ kJ/kg, $s_5 = 1.076$ kJ/kg K

State 6: $s_6 = s_5$ => $T_6 = 10.2^oC$, $h_6 = 290.1$ kJ/kg

State 7: $s_7 = s_5$ => $x_7 = (s_7 - s_f)/s_{fg} = 0.9983$, $h_7 = 271.5$ kJ/kg

C.V Pump P1

$$w_{P1} = h_2 - h_1 = v_1(P_2 - P_1) = 0.000803\ (800 - 400) = 0.32 \text{ kJ/kg}$$

$$\Rightarrow\ h_2 = h_1 + w_{P1} = 28.24 + 0.32 = 28.56 \text{ kJ/kg}$$

C.V. Feedwater heater: Call $\dot{m}_6 / \dot{m}_{tot} = y$ (the extraction fraction)

Energy Eq.: $(1 - y)\, h_2 + y\, h_6 = 1\, h_3$

$$y = \frac{h_3 - h_2}{h_6 - h_2} = \frac{57.76 - 28.56}{290.1 - 28.56} = \mathbf{0.1116}$$

C.V. Turbine

$$\dot{W}_T = \dot{m}_{TOT} h_5 - x\dot{m}_{TOT} h_6 - (1 - y)\dot{m}_{TOT} h_7$$

$$w_T = h_5 - y\, h_6 - (1 - y)\, h_7$$

$$= 329.1 - 0.1116 \times 290.1 - (1 - 0.1116) \times 271.5 = 55.52 \text{ kJ/kg}$$

11.42

A Rankine cycle operating with ammonia is heated by some low temperature source so the highest T is 120°C at a pressure of 5000 kPa. Its low pressure is 1003 kPa and it operates with one open feedwater heater at 2033 kPa. The total flow rate is 5 kg/s. Find the extraction flow rate to the feedwater heater assuming its outlet state is saturated liquid at 2033 kPa. Find the total power to the two pumps.

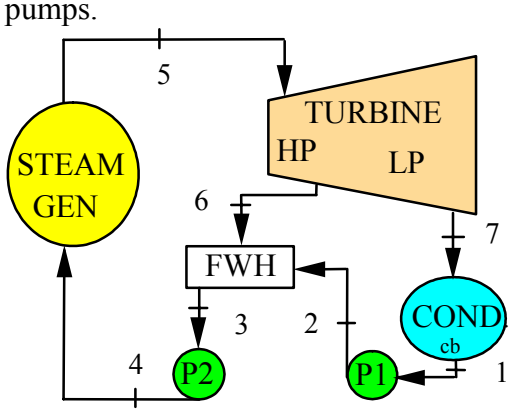

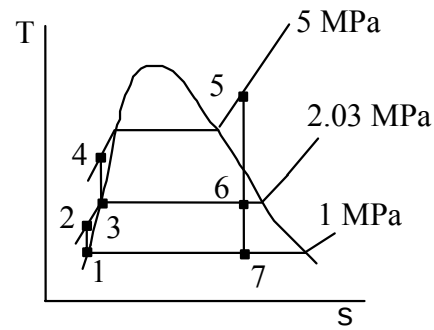

State 1: $x_1 = 0$, $h_1 = 298.25$ kJ/kg, $v_1 = 0.001658$ m^3/kg

State 3: $x_3 = 0$, $h_3 = 421.48$ kJ/kg, $v_3 = 0.001777$ m^3/kg

State 5: $h_5 = 421.48$ kJ/kg, $s_5 = 4.7306$ kJ/kg K

State 6: $s_6 = s_5$ => $x_6 = (s_6 - s_f)/s_{fg} = 0.99052$, $h_6 = 1461.53$ kJ/kg

C.V Pump P1

$$w_{P1} = h_2 - h_1 = v_1(P_2 - P_1) = 0.001658(2033 - 1003) = 1.708 \text{ kJ/kg}$$

$$\Rightarrow h_2 = h_1 + w_{P1} = 298.25 + 1.708 = 299.96 \text{ kJ/kg}$$

C.V. Feedwater heater: Call $\dot{m}_6 / \dot{m}_{tot} = x$ (the extraction fraction)

Energy Eq.: $(1 - x)\, h_2 + x\, h_6 = 1\, h_3$

$$x = \frac{h_3 - h_2}{h_6 - h_2} = \frac{421.48 - 299.96}{1461.53 - 299.96} = \mathbf{0.1046}$$

$$\dot{m}_{extr} = x\, \dot{m}_{tot} = 0.1046 \times 5 = \mathbf{0.523\ kg/s}$$

$$\dot{m}_1 = (1 - x)\, \dot{m}_{tot} = (1 - 0.1046)\, 5 = 4.477 \text{ kg/s}$$

C.V Pump P2

$$w_{P2} = h_4 - h_3 = v_3(P_4 - P_3) = 0.001777\,(5000 - 2033) = 5.272 \text{ kJ/kg}$$

Total pump work

$$\dot{W}_p = \dot{m}_1 w_{P1} + \dot{m}_{tot}\, w_{P2} = 4.477 \times 1.708 + 5 \times 5.272 = \mathbf{34\ kW}$$

11.43

A steam power plant has high and low pressures of 20 MPa and 10 kPa, and one open feedwater heater operating at 1 MPa with the exit as saturated liquid. The maximum temperature is 800°C and the turbine has a total power output of 5 MW. Find the fraction of the flow for extraction to the feedwater and the total condenser heat transfer rate.

The physical components and the T-s diagram is as shown in Fig. 11.10 in the main text for one open feedwater heater. The same state numbering is used. From the Steam Tables:

State 5: (P, T) $h_5 = 4069.8$ kJ/kg, $s_5 = 7.0544$ kJ/kg K,

State 1: (P, x = 0) $h_1 = 191.81$ kJ/kg, $v_1 = 0.00101$ m^3/kg

State 3: (P, x = 0) $h_3 = 762.8$ kJ/kg, $v_3 = 0.001127$ m^3/kg

Pump P1: $w_{P1} = v_1(P_2 - P_1) = 0.00101 \times 990 = 1$ kJ/kg

$$h_2 = h_1 + w_{P1} = 192.81 \text{ kJ/kg}$$

Turbine 5-6: $s_6 = s_5 \Rightarrow h_6 = 3013.7$ kJ/kg

$$w_{T56} = h_5 - h_6 = 4069.8 - 3013.7 = 1056.1 \text{ kJ/kg}$$

Feedwater Heater ($\dot{m}_{TOT} = \dot{m}_5$): $x\dot{m}_5 h_6 + (1 - x)\dot{m}_5 h_2 = \dot{m}_5 h_3$

$$\Rightarrow \quad x = \frac{h_3 - h_2}{h_6 - h_2} = \frac{762.8 - 192.81}{3013.7 - 192.81} = \mathbf{0.2021}$$

To get state 7 into condenser consider turbine.

$$s_7 = s_6 = s_5 \quad \Rightarrow \quad x_7 = (7.0544 - 0.6493)/7.5009 = 0.85391$$

$$h_7 = 191.81 + 0.85391 \times 2392.82 = 2235.1 \text{ kJ/kg}$$

Find specific turbine work to get total flow rate

$$\dot{W}_T = \dot{m}_{TOT} h_5 - x\dot{m}_{TOT} h_6 - (1 - x)\dot{m}_{TOT} h_7 =$$

$$= \dot{m}_{TOT} \times (h_5 - xh_6 - (1 - x)h_7) = \dot{m}_{TOT} \times 1677.3$$

$$\dot{m}_{TOT} = 5000/1677.3 = 2.98 \text{ kg/s}$$

$$\dot{Q}_L = \dot{m}_{TOT}\,(1\text{-}x)\,(h_7\text{-}h_1) = 2.98 \times 0.7979(2235.1 - 191.81) = \mathbf{4858\ kW}$$

11.44

Find the cycle efficiency for the cycle in Problem 11.39
CV Feedwater heater.

States given and fixed from knowing Fig. 11.10:

5: $h_5 = 1614.6$ kJ/kg, $s_5 = 5.4971$ kJ/kgK

3: $h_3 = 171.226$ kJ/kg

1: $h_1 = 111.66$ kJ/kg, $v_1 = 0.001519$ m^3/kg

Analyze the pump: $w_{P1} = v_1 (P_2 - P_1) = 0.001519 \text{ m}^3/\text{kg} \times (400 - 236.3) \text{ kPa}$
$= 0.249$ kJ/kg
$h_2 = h_1 + w_{P1} = 111.66 + 0.249 = 111.909$ kJ/kg

Analyze the turbine: 6: 400 kPa, $s_6 = s_5$ => $h_6 = 1479.6$ kJ/kg
7: -15 C, $s_7 = s_5$ => $h_7 = 1413.56$ kJ/kg

Analyze the FWH leads to Eq.11.5:

$$y = \frac{h_3 - h_2}{h_6 - h_2} = \frac{171.226 - 111.909}{1479.6 - 11.909} = 0.0434$$

$$w_T = h_5 - y\, h_6 - (1 - y)\, h_7$$
$$= 1614.6 - 0.0434 \times 1479.6 - (1 - 0.0434) \times 1413.56$$
$$= 198.15 \text{ kJ/kg}$$

Pump 2 gives: $w_{P2} = v_3 (P_4 - P_3) = 0.00156 \text{ m}^3/\text{kg} \times (1000 - 400) \text{ kPa}$
$= 0.936$ kJ/kg

Net work: $w_{net} = w_T - w_{P2} - (1 - y)\, w_{P1} = 198.15 - 0.936 - (1\text{-}0.0434)\, 0.249$
$= 196.98$ kJ/kg

Boiler: $q_H = h_5 - h_4 = h_5 - (h_3 + w_{P2}) = 1614.6 - 171.65 - 0.936$
$= 1442$ kJ/kg

Cycle efficiency: $\eta = w_{net} / q_H = 196.98 / 1442 =$ **0.1366**

11.45

A power plant with one open feedwater heater has a condenser temperature of 45°C, a maximum pressure of 5 MPa, and boiler exit temperature of 900°C. Extraction steam at 1 MPa to the feedwater heater is mixed with the feedwater line so the exit is saturated liquid into the second pump. Find the fraction of extraction steam flow and the two specific pump work inputs.

Solution:

The complete diagram is as in Figure 11.10 in the main text.

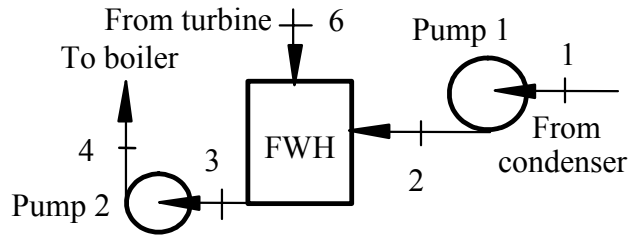

State out of boiler 5: $h_5 = 4378.82$ kJ/kg, $s_5 = 7.9593$ kJ/kg K

C.V. Turbine reversible, adiabatic: $s_7 = s_6 = s_5$

State 6: P_6 , s_6 => $h_6 = 3640.6$ kJ/kg, $T_6 = 574^oC$

C.V Pump P1

$w_{P1} = h_2 - h_1 = v_1(P_2 - P_1) = 0.00101(1000 - 9.6) =$ **1.0 kJ/kg**

=> $h_2 = h_1 + w_{P1} = 188.42 + 1.0 = 189.42$ kJ/kg

C.V. Feedwater heater: Call $\dot{m}_6 / \dot{m}_{tot} = x$ (the extraction fraction)

Energy Eq.: $(1 - x)\, h_2 + x\, h_6 = 1\, h_3$

$$x = \frac{h_3 - h_2}{h_6 - h_2} = \frac{762.79 - 189.42}{3640.6 - 189.42} = \mathbf{0.1661}$$

C.V Pump P2

$w_{P2} = h_4 - h_3 = v_3(P_4 - P_3) = 0.001127(5000 - 1000) =$ **4.5 kJ/kg**

11.46

In one type of nuclear power plant, heat is transferred in the nuclear reactor to liquid sodium. The liquid sodium is then pumped through a heat exchanger where heat is transferred to boiling water. Saturated vapor steam at 5 MPa exits this heat exchanger and is then superheated to 600°C in an external gas-fired superheater. The steam enters the turbine, which has one (open-type) feedwater extraction at 0.4 MPa. The condenser pressure is 7.5 kPa. Determine the heat transfer in the reactor and in the superheater to produce a net power output of 1 MW.

Solution:

The complete cycle diagram is similar to Figure 11.8 except the boiler is sparated into a section heated by the reactor and a super heater section.

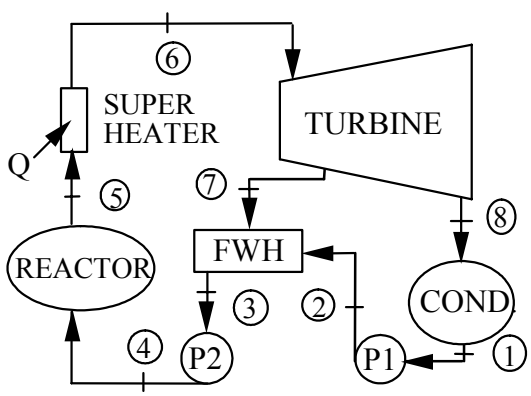

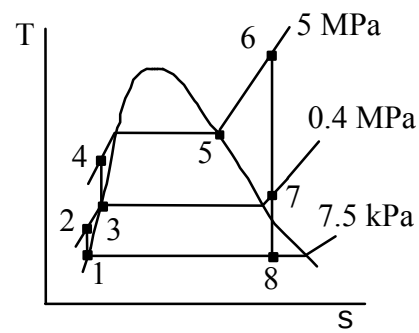

CV. Pump P1

$$w_{P1} = 0.001008(400 - 7.5) = 0.4 \text{ kJ/kg} ;$$

$$h_2 = h_1 + w_{P1} = 168.8 + 0.4 = 169.2 \text{ kJ/kg}$$

CV. Pump P2

$$w_{P2} = 0.001084(5000 - 400) = 5.0 \text{ kJ/kg}$$

$$h_4 = h_3 + w_{P2} = 604.7 + 5.0 = 609.7 \text{ kJ/kg}$$

C.V. Turbine (to get exit state properties)

$$s_7 = s_6 = 7.2589, \quad P_7 = 0.4 \text{ MPa} \Rightarrow T_7 = 221.2^{o}\text{C}, \quad h_7 = 2904.5 \text{ kJ/kg}$$

$$s_8 = s_6 = 7.2589 = 0.5764 + x_8 \times 7.6750 \qquad x_8 = 0.8707$$

$$h_8 = 168.8 + 0.8707 \times 2406.0 = 2263.7 \text{ kJ/kg}$$

CV: Feedwater heater FWH (to get the extraction fraction x_7)

Divide the equations with the total mass flow rate $\dot{m}_3 = \dot{m}_4 = \dot{m}_5 = \dot{m}_6$

Continuity: $x_2 + x_7 = x_3 = 1.0$, Energy Eq.: $x_2h_2 + x_7h_7 = h_3$

$$x_7 = (604.7-169.2)/(2904.5-169.2) = 0.1592$$

CV: Turbine (to get the total specific work)

Full flow from 6 to 7 and the fraction $(1 - x_7)$ from 7 to 8.

$$w_T = (h_6 - h_7) + (1 - x_7)(h_7 - h_8)$$

$$= 3666.5-2904.5 + 0.8408(2904.5-2263.7) = 1300.8 \text{ kJ/kg}$$

CV: Pumps (P1 has $x_1 = 1 - x_7$, P2 has the full flow $x_3 = 1$)

$$w_P = x_1 w_{P1} + x_3 w_{P2} = 0.8408 \times 0.4 + 1 \times 5.0 = 5.3 \text{ kJ/kg}$$

$$w_{NET} = 1300.8 - 5.3 = 1295.5 \quad \Rightarrow \quad \dot{m} = 1000/1295.5 = 0.772 \text{ kg/s}$$

CV: Reactor (this has the full flow)

$$\dot{Q}_{REACT} = \dot{m}(h_5 - h_4) = 0.772(2794.3 - 609.7) = \mathbf{1686\ kW}$$

CV: Superheater (this has the full flow)

$$\dot{Q}_{SUP} = \dot{m}(h_6 - h_5) = 0.772\ (3666.5 - 2794.3) = \mathbf{673\ kW}$$

11.47

Consider an ideal steam regenerative cycle in which steam enters the turbine at 3.0 MPa, 400°C, and exhausts to the condenser at 10 kPa. Steam is extracted from the turbine at 0.8 MPa for an open feedwater heater. The feedwater leaves the heater as saturated liquid. The appropriate pumps are used for the water leaving the condenser and the feedwater heater. Calculate the thermal efficiency of the cycle and the net work per kilogram of steam.

Solution:

This is a standard Rankine cycle with an open FWH as shown in Fig.11.10

C.V Pump P1

$$w_{P1} = h_2 - h_1 = v_1(P_2 - P_1) = 0.00101(800 - 10) = 0.798 \text{ kJ/kg}$$

$$\Rightarrow \; h_2 = h_1 + w_{P1} = 191.81 + 0.798 = 192.61 \text{ kJ/kg}$$

C.V. FWH Call $\dot{m}_6 / \dot{m}_{tot} = x$ (the extraction fraction)

$$(1 - x)\, h_2 + x\, h_6 = 1\, h_3$$

$$x = \frac{h_3 - h_2}{h_6 - h_2} = \frac{721.1 - 192.61}{2891.6 - 192.61} = 0.1958$$

C.V Pump P2

$$w_{P2} = h_4 - h_3 = v_3(P_4 - P_3) = 0.001115(3000 - 800) = 2.45 \text{ kJ/kg}$$

$$h_4 = h_3 + w_{P2} = 721.1 + 2.45 = 723.55 \text{ kJ/kg}$$

CV Boiler: $q_H = h_5 - h_4 = 3230.82 - 723.55 = 2507.3$ kJ/kg

CV Turbine

2nd Law $s_7 = s_6 = s_5 = 6.9211$ kJ/kg K

P_6 , s_6 => $h_6 = 2891.6$ kJ/kg (superheated vapor)

$$s_7 = s_6 = s_5 = 6.9211 \quad \Rightarrow \quad x_7 = \frac{6.9211 - 0.6492}{7.501} = 0.83614$$

$$\Rightarrow \quad h_7 = 191.81 + x_7\, 2392.82 = 2192.55 \text{ kJ/kg}$$

Turbine has full flow in HP section and fraction 1-x in LP section

$$\dot{W}_T / \dot{m}_5 = h_5 - h_6 + (1 - x)\,(h_6 - h_7)$$

$$w_T = 3230.82 - 2891.6 + (1 - 0.1988)\,(2891.6 - 2192.55) = 899.3 \text{ kJ/kg}$$

P2 has the full flow and P1 has the fraction 1-x of the flow

$$w_{net} = w_T - (1 - x)\, w_{P1} - w_{P2}$$

$$= 899.3 - (1 - 0.1988)0.798 - 2.45 = \mathbf{896.2\ kJ/kg}$$

$$\eta_{cycle} = w_{net} / q_H = 896.2 / 2507.3 = \mathbf{0.357}$$

11.48

A steam power plant operates with a boiler output of 20 kg/s steam at 2 MPa, 600°C. The condenser operates at 50°C dumping energy to a river that has an average temperature of 20°C. There is one open feedwater heater with extraction from the turbine at 600 kPa and its exit is saturated liquid. Find the mass flow rate of the extraction flow. If the river water should not be heated more than 5°C how much water should be pumped from the river to the heat exchanger (condenser)?

Solution:

The setup is as shown in Fig. 11.10.

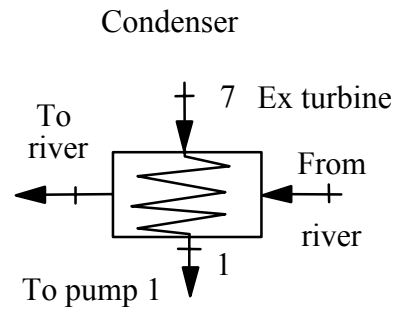

1: 50°C sat liq. $v_1 = 0.001012\ m^3/kg$,

$h_1 = 209.31$ kJ/kg

2: 600 kPa $s_2 = s_1$

3: 600 kPa, sat liq. $h_3 = h_f = 670.54$ kJ/kg

5: (P, T) $h_5 = 3690.1$ kJ/kg,

$s_5 = 7.7023$ kJ/kg K

6: 600 kPa, $s_6 = s_5$ => $h_6 = 3270.0$ kJ/kg

CV P1

$$w_{P1} = v_1(P_2 - P_1) = 0.001012\ (600 - 12.35) = 0.595 \text{ kJ/kg}$$

$$h_2 = h_1 + w_{P1} = 209.9 \text{ kJ/kg}$$

C.V FWH

$$x\ h_6 + (1 - x)\ h_2 = h_3$$

$$x = \frac{h_3 - h_2}{h_6 - h_2} = \frac{670.54 - 209.9}{3270.0 - 209.9} = 0.1505$$

$$\dot{m}_6 = x\ \dot{m}_5 = 0.1505 \times 20 = \mathbf{3\ kg/s}$$

CV Turbine: $s_7 = s_6 = s_5$ => $x_7 = 0.9493$, $h_7 = 2471.17$ kJ/kg

CV Condenser

$$q_L = h_7 - h_1 = 2471.17 - 209.31 = 2261.86 \text{ kJ/kg}$$

The heat transfer out of the water from 7 to 1 goes into the river water

$$\dot{Q}_L = (1 - x)\ \dot{m}q_L = 0.85 \times 20 \times 2261.86 = 38\ 429 \text{ kW}$$

$$= \dot{m}_{H2O}\ \Delta h_{H2O} = \dot{m}_{H2O}\ (h_{f25} - h_{f20}) = \dot{m}\ (20.93)$$

$$\dot{m} = 38\ 429 / 20.93 = \mathbf{1836\ kg/s}$$

Closed Feedwater Heaters

11.49

Write the analysis (continuity and energy equations) for the closed feed water heater with a drip pump as shown in Fig.11.13. Take the control volume to have state 4 out so it includes the drip pump. Find the equation for the extraction fraction.

CV Feedwater heater plus drip pump.

Continuity Eq.: $\dot{m}_6 + \dot{m}_2 = \dot{m}_4$

Energy Eq.: $\dot{m}_6 h_6 + \dot{m}_2 h_2 + \dot{m}_6\, w_{P\ drip} = \dot{m}_4 h_4$

CV drip pump

$$w_{P\ drip} = v_6\,(P_4 - P_6) = h_{6b} - h_{6a}\ ; \quad h_{6a} = h_{f\ at\ P6}$$

Divide the energy equation with the full flow rate ($\dot{m}_4$) to get

Energy Eq.: $y\, h_6 + (1 - y)\, h_2 + y\, w_{P\ drip} = h_4$

Now solve for the fraction $y = \dot{m}_6 / \dot{m}_4$

$$y = \frac{h_4 - h_2}{h_6 - h_2 + w_{P\ drip}}$$

So to use this expression we assume we know states 2, 4 and 6 and have analyzed the drip pump.

11.50

A closed feedwater heater in a regenerative steam power cycle heats 20 kg/s of water from 100°C, 20 MPa to 250°C, 20 MPa. The extraction steam from the turbine enters the heater at 4 MPa, 275°C, and leaves as saturated liquid. What is the required mass flow rate of the extraction steam?

Solution:

The schematic from Figure 11.11 has the feedwater from the pump coming at state 2 being heated by the extraction flow coming from the turbine state 6 so the feedwater leaves as saturated liquid state 4 and the extraction flow leaves as condensate state 6a.

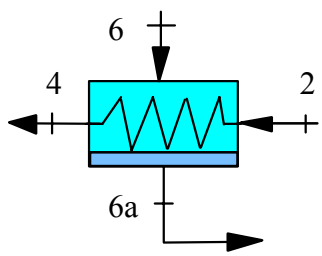

From table B.1		h kJ/kg
B.1.4:	100°C, 20 MPa	$h_2 = 434.06$
B.1.4:	250°C, 20 MPa	$h_4 = 1086.75$
B.1.3:	4 MPa, 275°C	$h_6 = 2886.2$
B.1.2:	4 MPa, sat. liq.	$h_{6a} = 1087.31$

C.V. Feedwater Heater

Energy Eq.: $\dot{m}_2 h_2 + \dot{m}_6 h_6 = \dot{m}_2 h_4 + \dot{m}_6 h_{6a}$

Since all four states are known we can solve for the extraction flow rate

$$\dot{m}_6 = \dot{m}_2 \frac{h_2 - h_4}{h_{6a} - h_6}$$

$$= 20 \frac{434.06 - 1086.75}{1087.31 - 2886.2} \text{ kg/s} = \mathbf{7.257\ kg/s}$$

11.51

A power plant with one closed feedwater heater has a condenser temperature of 45°C, a maximum pressure of 5 MPa, and boiler exit temperature of 900°C. Extraction steam at 1 MPa to the feedwater heater condenses and is pumped up to the 5 MPa feedwater line where all the water goes to the boiler at 200°C. Find the fraction of extraction steam flow and the two specific pump work inputs.

Solution:

$s_1 = 0.6387$ kJ/kg K,
$h_1 = 188.45$ kJ/kg
$v_1 = 0.00101$ m^3/kg,
$s_4 = 2.1387$ kJ/kg K,
$h_4 = 762.81$ kJ/kg

$T_6 \Rightarrow h_6 = 853.9$ kJ/kg

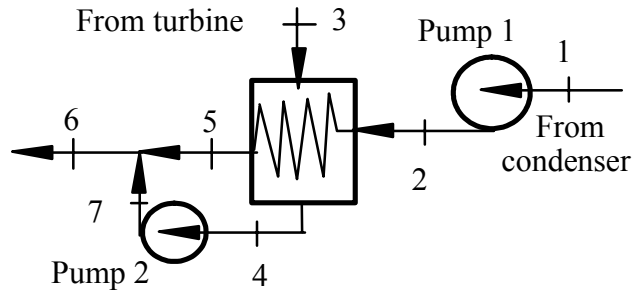

C.V. Turbine: Reversible, adiabatic so constant s from inlet to extraction point

$$s_3 = s_{IN} = 7.9593 \text{ kJ/kg K} \quad \Rightarrow \quad T_3 = \mathbf{573.8}, \quad h_3 = 3640.6 \text{ kJ/kg}$$

C.V. P1: $w_{P1} = v_1(P_2 - P_1) = \mathbf{5.04\ kJ/kg} \Rightarrow h_2 = h_1 + w_{P1} = 193.49$ kJ/kg

C.V. P2: $w_{P2} = v_4(P_7 - P_4) = \mathbf{4.508\ kJ/kg} \Rightarrow h_7 = h_4 + w_{P2} = 767.31$ kJ/kg

C.V. Total FWH and pumps:

The extraction fraction is: $x = \dot{\mathbf{m}}_3/\dot{\mathbf{m}}_6$

Continuity Eq.: $\dot{m}_6 = \dot{m}_1 + \dot{m}_3$, $1 = (1- y) + y$

Energy: $(1 - y)h_2 + y\, h_3 + y\, w_{P2} = h_6$

$$y = \frac{h_6 - h_2}{h_3 + w_{P2} - h_2} = \frac{853.9 - 193.49}{3640.6 + 4.508 - 193.49} = 0.1913$$

$$\dot{\mathbf{m}}_3/\dot{\mathbf{m}}_6 = \mathbf{y = 0.1913}$$

11.52

A Rankine cycle feeds 5 kg/s ammonia at 2 MPa, 140°C to the turbine, which has an extraction point at 800 kPa. The condenser is at -20°C and a closed feed water heater has an exit state (3) at the temperature of the condensing extraction flow and it has a drip pump. The source for the boiler is at constant 180°C. Find the extraction flow rate and state 4 into the boiler.

P_1 = 190.2 kPa,
h_1 = 89.05 kJ/kg
v_1 = 0.001504 m^3/kg,
s_5 = 5.5022 kJ/kg K,
h_5 = 1738.2 kJ/kg
$T_{6a} = T_{sat\ 800\ kPa}$ = 17.85^{o}C
=> h_{6a} = 264.18 kJ/kg

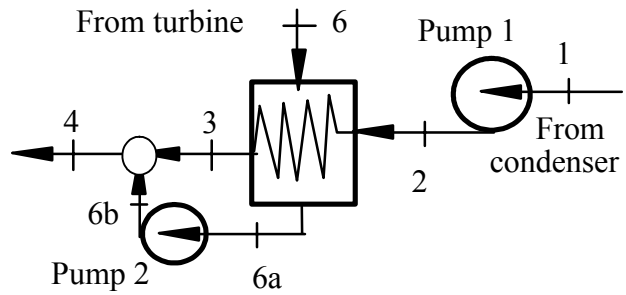

C.V. Turbine: Reversible, adiabatic so constant s from inlet to extraction point

$$s_6 = s_{IN} = 5.5022 \text{ kJ/kg K} \quad \Rightarrow \quad T_6 = 63.4^oC, \quad h_6 = 1580.89 \text{ kJ/kg}$$

C.V. P1: $w_{P1} = v_1(P_2 - P_1) = 0.001504(2000 - 190.2) = 2.722$ kJ/kg

$$\Rightarrow \quad h_2 = h_1 + w_{P1} = 91.772 \text{ kJ/kg}$$

C.V. P2: $w_{P2} = v_{6a}\,(P_4 - P_6) = 0.0016108\,(2000 - 800) = 1.933$ kJ/kg

$$\Rightarrow \quad h_{6b} = h_{6a} + w_{P2} = 266.11 \text{ kJ/kg}$$

C.V. Total FWH and pump (notice $h_3 = h_{6a}$ as we do not have table for this state)

The extraction fraction is: $y = \dot{m}_6/\dot{m}_4$

Energy: $(1 - y)h_2 + yh_6 = (1 - y)h_3 + yh_{6a}$

$$y = \frac{h_3 - h_2}{h_3 - h_2 + h_6 - h_{6a}} = \frac{264.18 - 91.772}{264.18 - 91.772 + 1580.89 - 264.18} = 0.1158$$

$$\dot{m}_6 = y\,\dot{m}_4 = 0.1158 \times 5 = \mathbf{0.5789\ kg/s}$$

C.V. The junction after FWH and pump 2.

$$h_4 = (1-y)h_3 + y\,h_{6b} = (1 - 0.1158) \times 264.18 + 0.1158 \times 266.11 = 264.4 \text{ kJ/kg}$$

11.53

Assume the powerplant in Problem 11.42 has one closed feedwater heater instead of the open FWH. The extraction flow out of the FWH is saturated liquid at 2033 kPa being dumped into the condenser and the feedwater is heated to 50°C. Find the extraction flow rate and the total turbine power output.

State 1: $x_1 = 0$, $h_1 = 298.25$ kJ/kg, $v_1 = 0.001658$ m^3/kg

State 3: $h_3 = h_f + (P_3 - P_{sat})v_f = 421.48 + (5000-2033)0.001777 = 426.75$ kJ/kg

State 5: $h_5 = 421.48$ kJ/kg, $s_5 = 4.7306$ kJ/kg K

State 6: $s_6 = s_5$ => $x_6 = (s_6 - s_f)/s_{fg} = 0.99052$, $h_6 = 1461.53$ kJ/kg

State 6a: $x_{6a} = 0$ => $h_{6a} = 421.48$ kJ/kg

State 7: $s_7 = s_5$ => $x_7 = (s_7 - s_f)/s_{fg} = 0.9236$, $h_7 = 1374.43$ kJ/kg

C.V Pump P1

$$w_{P1} = h_2 - h_1 = v_1(P_2 - P_1) = 0.001658(5000 - 1003) = 6.627 \text{ kJ/kg}$$

$$\Rightarrow h_2 = h_1 + w_{P1} = 298.25 + 6.627 = 304.88 \text{ kJ/kg}$$

C.V. Feedwater heater: Call $\dot{m}_6 / \dot{m}_{tot} = y$ (the extraction fraction)

Energy Eq.: $h_2 + y\, h_6 = 1\, h_3 + y\, h_{6a}$

$$y = \frac{h_3 - h_2}{h_6 - h_{6a}} = \frac{426.75 - 304.88}{1461.53 - 421.48} = \mathbf{0.1172}$$

$$\dot{m}_{extr} = y\, \dot{m}_{tot} = 0.1172 \times 5 = \mathbf{0.586\ kg/s}$$

Total turbine work

$$\dot{W}_T = \dot{m}_{tot}(h_5 - h_6) + (1 - y)\dot{m}_{tot}(h_6 - h_7)$$

$$= 5(1586.3 - 1461.53) + (5 - 0.586)(1461.53 - 1374.43) = \mathbf{1008\ kW}$$

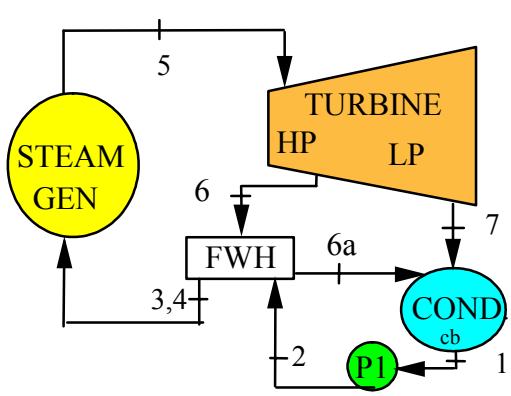

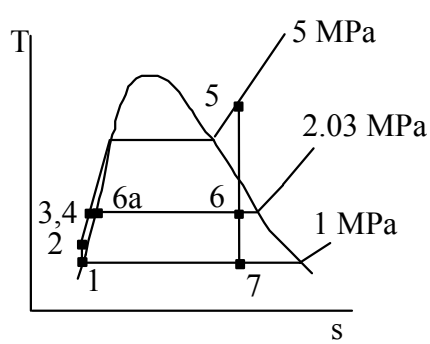

11.54

Do Problem 11.43 with a closed feedwater heater instead of an open and a drip pump to add the extraction flow to the feed water line at 20 MPa. Assume the temperature is 175°C after the drip pump flow is added to the line. One main pump brings the water to 20 MPa from the condenser.

Solution:

$v_1 = 0.00101\ m^3/kg$,

$h_1 = 191.81$ kJ/kg

$T_4 = 175^oC$; $h_4 = 751.66$ kJ/kg

$h_{6a} = h_{f\ 1MPa} = 762.79$ kJ/kg,

$v_{6a} = 0.001127\ m^3/kg$

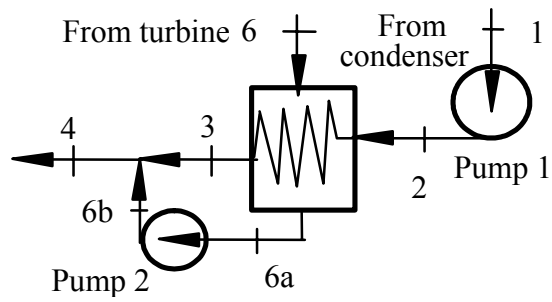

Turbine section 1: $s_6 = s_5 = 7.0544$ kJ/kg K

$P_6 = 1$ MPa => $h_6 = 3013.7$ kJ/kg

C.V Pump 1

$w_{P1} = h_2 - h_1 = v_1(P_2 - P_1) = 0.00101(20\ 000 - 10) = 20.19$ kJ/kg

=> $h_2 = h_1 + w_{P1} = 191.81 + 20.19 = 212.0$ kJ/kg

C.V Pump 2

$w_{P2} = h_{6b} - h_{6a} = v_{6a}(P_{6b} - P_{6a}) = 0.001127(20\ 000 - 1000) = 21.41$ kJ/kg

C.V FWH + P2 select the extraction fraction to be $y = \dot{m}_6 / \dot{m}_4$

$y\, h_6 + (1 - y)\, h_2 + y\, (w_{P2}) = h_4$

$$y = \frac{h_4 - h_2}{h_6 - h_2 + w_{P2}} = \frac{751.66 - 212.0}{3013.7 - 212.0 + 21.41} = \mathbf{0.191}$$

Turbine: $s_7 = s_6 = s_5$ & $P_7 = 10$ kPa

$$\Rightarrow\ x_7 = \frac{7.0544 - 0.6493}{7.5009} = 0.85391$$

$h_7 = 191.81 + 0.85391 \times 2392.82 = 2235.1$ kJ/kg

$w_T = [\ h_5 - h_6 + (1 - y)\ (h_6 - h_7)\ ]$

$= [\ 4069.8 - 3013.7 + 0.809\ (3013.7 - 2235.1)] = 1686$ kJ/kg

$\dot{W}_T = 5000$ kW $= \dot{m}_5 \times w_T = \dot{m}_5 \times 1686$ kJ/kg => $\dot{m}_5 = 2.966$ kg/s

$\dot{Q}_L = \dot{m}_5(1 - y)\ (h_7 - h_1) = 2.966 \times 0.809\ (2235.1 - 191.81) = \mathbf{4903\ kW}$

11.55

Repeat Problem 11.47, but assume a closed instead of an open feedwater heater. A single pump is used to pump the water leaving the condenser up to the boiler pressure of 3.0 MPa. Condensate from the feedwater heater is drained through a trap to the condenser.

Solution:

C.V. Turbine, 2nd law:

$s_4 = s_5 = s_6 = 6.9211$ kJ/kg K

$h_4 = 3230.82$, $h_5 = 2891.6$

=> $x_6 = (6.9211 - 0.6492)/7.501$

$= 0.83614$

$h_6 = 191.81 + x_6\ 2392.82$

$=2192.55$ kJ/kg

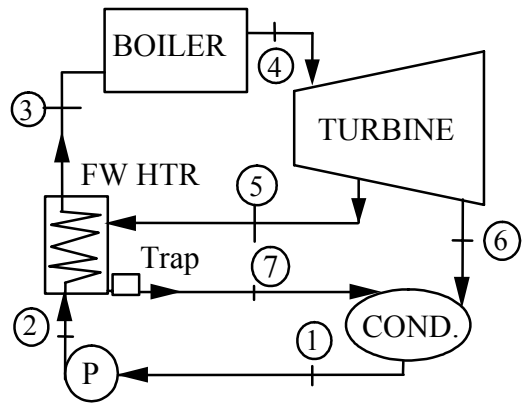

Assume feedwater heater exit at the T of the condensing steam

C.V Pump

$w_P = h_2 - h_1 = v_1(P_2 - P_1) = 0.00101(3000 - 10) = 3.02$ kJ/kg

$h_2 = h_1 + w_P = 191.81 + 3.02 = 194.83$ kJ/kg

$T_3 = T_{sat}\,(P_5) = 170.43°C$, $h_3 = h_f = h_7 = 721.1$ kJ/kg

C.V FWH

$\dot{m}_5 / \dot{m}_3 = y$, Energy Eq.: $h_2 + y\,h_5 = h_3 + h_7\,y$

$$y = \frac{h_3 - h_2}{h_5 - h_{f\,800}} = \frac{721.1 - 194.83}{2891.6 - 721.1} = 0.2425$$

Turbine work with full flow from 4 to 5 fraction 1-y flows from 5 to 6

$w_T = h_4 - h_5 + (1 - y)(h_5 - h_6)$

$= 3230.82 - 2891.6 + 0.7575\,(2891.6 - 2192.55)$

$= 868.75$ kJ/kg

$w_{net} = w_T - w_P = 868.75 - 3.02 =$ **865.7 kJ/kg**

$q_H = h_4 - h_3 = 3230.82 - 721.1 = 2509.7$ kJ/kg

$\eta_{cycle} = w_{net} / q_H = 865.7 / 2509.7 =$ **0.345**

11.56

Repeat Problem 11.47, but assume a closed instead of an open feedwater heater. A single pump is used to pump the water leaving the condenser up to the boiler pressure of 3.0 MPa. Condensate from the feedwater heater is going through a drip pump and added to the feedwater line so state 4 is at T_6.

Solution:

C.V. Turbine, 2nd law:

$s_5 = s_6 = s_7 = 6.9211$ kJ/kg K

$h_5 = 3230.82$, $h_6 = 2891.6$

=> $x_7 = (6.9211 - 0.6492)/7.501$

$= 0.83614$

$h_7 = 191.81 + x_7\ 2392.82$

$=2192.55$ kJ/kg

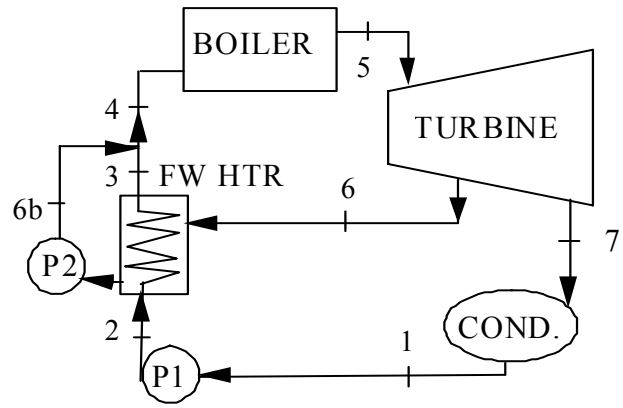

Assume feedwater heater exit state 4 at the T of the condensing steam

C.V Pump 1

$$w_{P1} = h_2 - h_1 = v_1(P_2 - P_1) = 0.00101(3000 - 10) = 3.02 \text{ kJ/kg}$$

$$h_2 = h_1 + w_{P1} = 191.81 + 3.02 = 194.83 \text{ kJ/kg}$$

$$T_4 = T_{sat}(P_6) = 170.43°\text{C}, \quad h_4 \approx h_f = h_{6a} = 721.1 \text{ kJ/kg}$$

C.V Pump 2 (the drip pump)

$$w_{P2} = h_{6b} - h_{6a} = v_{6a}(P_{6b} - P_{6a}) = 0.001115(3000 - 800) = 2.45 \text{ kJ/kg}$$

C.V FWH + P2 select the extraction fraction to be $y = \dot{m}_6 / \dot{m}_4$

$$y\, h_6 + (1 - y)\, h_2 + y\,(w_{P2}) = h_4$$

$$y = \frac{h_4 - h_2}{h_6 - h_2 + w_{P2}} = \frac{721.1 - 194.83}{2891.6 - 194.83 + 2.45} = \mathbf{0.195}$$

Turbine work with full flow from 5 to 6 fraction 1– y flows from 6 to 7

$$w_T = [\, h_5 - h_6 + (1 - y)\,(h_6 - h_7)\,]$$

$$= [\, 3230.82 - 2891.6 + 0.805\,(2891.6 - 2192.55)] = 901.95 \text{ kJ/kg}$$

$$w_{net} = w_T - (1-y)w_{P1} - xw_{P2} = 901.95 - 0.805 \times 3.02 - 0.195 \times 2.45$$

$$= \mathbf{899.0\ kJ/kg}$$

$$q_H = h_5 - h_4 = 3230.82 - 721.1 = 2509.7 \text{ kJ/kg}$$

$$\eta_{cycle} = w_{net} / q_H = 899.0 / 2509.7 = \mathbf{0.358}$$

Nonideal Cycles

11.57

A Rankine cycle with water superheats to 500°C at 3 MPa in the boiler and the condenser operates at 100°C. All components are ideal except the turbine which has an exit state measured to be saturated vapor at 100°C. Find the cycle efficiency with a) an ideal turbine and b) the actual turbine.

Standard Rankine cycle 1-2-3-4s for ideal turbine.
Modified Rankine cycle 1-2-3-4ac for actual turbine

Table B.1.1: $v_1 = 0.001044\ m^3/kg$, $h_1 = 419.02$ kJ/kg
$h_3 = 3456.48$ kJ/kg, $s_3 = 7.2337$ kJ/kg-K

State 4s: $s_{4s} = s_3 = 7.2337 = s_f + x_{4s}\, s_{fg} = 1.3068 + x_{4s}\, 6.0480 \Rightarrow x_{4s} = 0.97998$
$\Rightarrow h_{4s} = h_f + x_{4s} h_{fg} = 419.02 + x_{4s}\, 2257.03 = 2630.9$ kJ/kg

State 4ac: $h_{4ac} = h_g = 2676.05$ kJ/kg

C.V. Pump: Assume adiabatic, reversible and incompressible flow

$$w_{ps} = \int v\, dP = v_1(P_2 - P_1) = 3.03 \text{ kJ/kg}$$

$$h_2 = h_1 + w_p = 419.02 + 3.03 = 422.05 \text{ kJ/kg}$$

C.V. Boiler $q_B = h_3 - h_2 = 3456.48 - 422.05 = 3034.4$ kJ/kg

C.V. Turbine; $w_{Ts} = h_3 - h_{4s} = 3456.48 - 2630.9 = 825.58$ kJ/kg

Efficiency: $\eta_{th} = w_{net} / q_B = (825.58 - 3.03)/3034.4 =$ **0.271**

Actual turbine: $w_{Tac} = h_3 - h_{4ac} = 3456.48 - 2676.05 = 780.43$ kJ/kg

Efficiency: $\eta_{th} = w_{net} / q_B = (780.43 - 3.03)/3034.4 =$ **0.256**

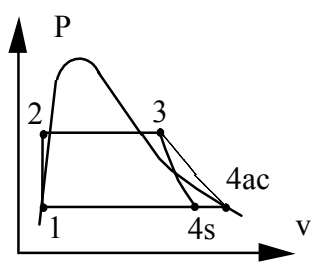

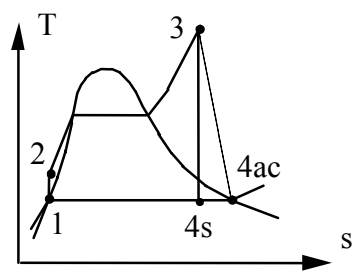

11.58

Steam enters the turbine of a power plant at 5 MPa and 400°C, and exhausts to the condenser at 10 kPa. The turbine produces a power output of 20 000 kW with an isentropic efficiency of 85%. What is the mass flow rate of steam around the cycle and the rate of heat rejection in the condenser? Find the thermal efficiency of the power plant and how does this compare with a Carnot cycle.

Solution: $\dot{W}_T = 20\ 000$ kW and $\eta_{Ts} = 85$ %

State 3: $h_3 = 3195.6$ kJ/kg , $s_3 = 6.6458$ kJ/kgK

State 1: $P_1 = P_4 = 10$ kPa , sat liq , $x_1 = 0$

$T_1 = 45.8^oC$, $h_1 = h_f = 191.8$ kJ/kg , $v_1 = v_f = 0.00101$ m^3/kg

C.V Turbine energy Eq.: $q_T + h_3 = h_4 + w_T$; $q_T = 0$

$w_T = h_3 - h_4$, Assume Turbine is isentropic

$s_{4s} = s_3 = 6.6458$ kJ/kgK , $s_{4s} = s_f + x_{4s}\, s_{fg}$, solve for $x_{4s} = 0.7994$

$h_{4s} = h_f + x_{4s}h_{fg} = 191.81 + x_{4s}\, 2392.82 = 2104.6$ kJ/kg

$w_{Ts} = h_3 - h_{4s} = 1091$ kJ/kg , $w_T = \eta_{Ts}w_{Ts} = 927.3$ kJ/kg

$$\dot{m} = \frac{\dot{W}_T}{w_T} = \mathbf{21.568\ kg/s}\ , \quad h_4 = h_3 - w_T = 2268.3 \text{ kJ/kg}$$

C.V. Condenser: 1st Law : $h_4 = h_1 + q_c + w_c$; $w_c = 0$

$q_c = h_4 - h_1 = 2076.5$ kJ/kg , $\dot{Q}_c = \dot{m}\, q_c = \mathbf{44\ 786\ kW}$

C.V. Pump: Assume adiabatic, reversible and incompressible flow

$w_{ps} = \int v\, dP = v_1(P_2 - P_1) = 5.04$ kJ/kg

1st Law : $h_2 = h_1 + w_p = 196.8$ kJ/kg

C.V Boiler : 1st Law : $q_B + h_2 = h_3 + w_B$; $w_B = 0$

$q_B = h_3 - h_2 = 2998.8$ kJ/kg

$w_{net} = w_T - w_P = 922.3$ kJ/kg

$\eta_{th} = w_{net} / q_B = \mathbf{0.307}$

Carnot cycle : $T_H = T_3 = 400^oC$, $T_L = T_1 = 45.8^oC$

$$\eta_{th} = \frac{T_H - T_L}{T_H} = \mathbf{0.526}$$

11.59

A steam power cycle has a high pressure of 3.0 MPa and a condenser exit temperature of 45°C. The turbine efficiency is 85%, and other cycle components are ideal. If the boiler superheats to 800°C, find the cycle thermal efficiency.

Solution:

Basic Rankine cycle as shown in Figure 11.3 in the main text.

C.V. Turbine: $w_T = h_3 - h_4$, $s_4 = s_3 + s_{T,GEN}$

Ideal: Table B.1.3: $s_4 = s_3 = 7.9862$ kJ/kg K

$\Rightarrow x_{4s} = (7.9862 - 0.6386)/7.5261 = 0.9763$

$h_{4s} = h_f + x\, h_{fg} = 188.42 + 0.9763 \times 2394.77 = 2526.4$ kJ/kg

$w_{Ts} = h_3 - h_{4s} = 4146 - 2526.4 = 1619.6$ kJ/kg

Actual: $w_{T,AC} = \eta \times w_{T,S} = 0.85 \times 1619.6 = 1376.66$ kJ/kg

C.V. Pump: $w_P = \int v\, dP \approx v_1(P_2 - P_1) = 0.00101\ (3000 - 9.6) = 3.02$ kJ/kg

$h_2 = h_1 + w_P = 188.42 + 3.02 = 191.44$ kJ/kg

C.V. Boiler: $q_H = h_3 - h_2 = 4146 - 191.44 = 3954.6$ kJ/kg

$\eta = (w_{T,AC} - w_P)/q_H = (1376.66 - 3.02)/3954.6 =$ **0.347**

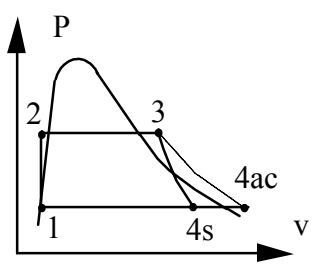

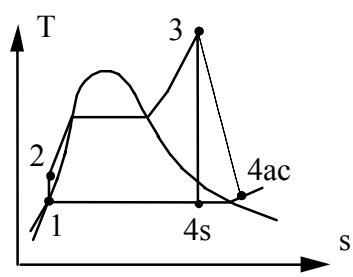

11.60

For the steam power plant described in Problem 11.13, assume the isentropic efficiencies of the turbine and pump are 85% and 80%, respectively. Find the component specific work and heat transfers and the cycle efficiency.

Solution:

This is a standard Rankine cycle with actual non-ideal turbine and pump.

CV Pump, Rev & Adiabatic:

$$w_{Ps} = h_{2s} - h_1 = v_1(P_2 - P_1) = 0.00101(3000 - 10) = 3.02 \text{ kJ/kg}; \quad s_{2s} = s_1$$

$$w_{Pac} = w_{Ps} / \eta_P = 3.02/0.8 = \mathbf{3.775} \text{ kJ/kg} = h_{2a} - h_1$$

$$h_{2a} = w_{Pac} + h_1 = 3.775 + 191.81 = 195.58 \text{ kJ/kg}$$

CV Boiler: $q_H = h_3 - h_{2a} = 2804.14 - 195.58 = \mathbf{2608.56\ kJ/kg}$

C.V. Turbine : $w_T = h_3 - h_4$; $s_4 = s_3$

$$s_4 = s_3 = 6.1869 = 0.6492 + x_4\,(7.501) \quad \Rightarrow \quad x_4 = 0.7383$$

$$\Rightarrow \; h_4 = 191.81 + 0.7383\,(2392.82) = 1958.34 \text{ kJ/kg}$$

$$w_{Ts} = 2804.14 - 1958.34 = 845.8 \text{ kJ/kg}$$

$$w_{Tac} = w_{Ts} \times \eta_T = \mathbf{718.9} = h_3 - h_{4a}$$

$$h_{4a} = h_3 - w_{Tac} = 2804.14 - 718.9 = 2085.24 \text{ kJ/kg}$$

CV Condenser: $q_L = h_{4a} - h_1 = 2085.24 - 191.81 = \mathbf{1893.4\ kJ/kg}$

$$\eta_{cycle} = \frac{w_{Tac} - w_{Pac}}{q_H} = \frac{718.9 - 3.78}{2608.56} = \mathbf{0.274}$$

This compares to 0.32 for the ideal case.

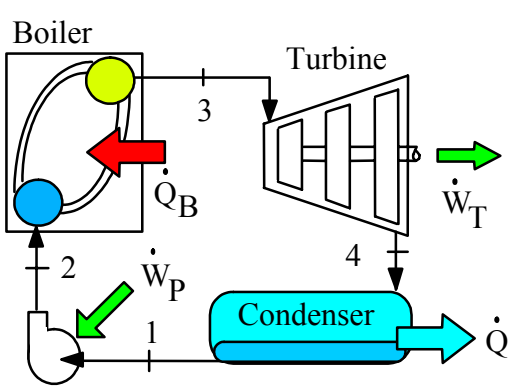

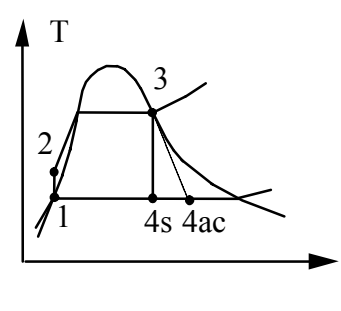

state 2s and 2ac nearly the same

11.61

A steam power plant operates with with a high pressure of 5 MPa and has a boiler exit temperature of of 600°C receiving heat from a 700°C source. The ambient at 20°C provides cooling for the condenser so it can maintain 45°C inside. All the components are ideal except for the turbine which has an exit state with a quality of 97%. Find the work and heat transfer in all components per kg water and the turbine isentropic efficiency. Find the rate of entropy generation per kg water in the boiler/heat source setup.

Solution:

Take CV around each component steady state in standard Rankine Cycle.

1: v = 0.00101; h = 188.42, s = 0.6386 (saturated liquid at 45°C).

3: h = 3666.5 kJ/kg, s = 7.2588 kJ/kg K superheated vapor

4_{ac}: h = 188.42 + 0.97 × 2394.8 = 2511.4 kJ/kg

CV Turbine: no heat transfer q = 0

$w_{ac} = h_3 - h_{4ac} = 3666.5 - 2511.4 =$ **1155.1 kJ/kg**

Ideal turbine: $s_4 = s_3 = 7.2588 \Rightarrow x_{4s} = 0.88, \quad h_{4s} = 2295$ kJ/kg

$w_s = h_3 - h_{4s} = 3666.5 - 2295 = 1371.5$ kJ/kg,

Eff = $w_{ac} / w_s = 1155.1 / 1371.5 =$ **0.842**

CV Condenser: no shaft work w = 0

$q_{out} = h_{4ac} - h_1 = 2511.4 - 188.42 =$ **2323 kJ/kg**

CV Pump: no heat transfer, q = 0 incompressible flow so v = constant

$w = v(P_2 - P_1) = 0.00101(5000 - 9.59) =$ **5.04 kJ/kg**

CV Boiler: no shaft work, w = 0

$q_H = h_3 - h_2 = h_3 - h_1 - w_P = 3666.5 - 188.42 - 5.04 =$ **3473 kJ/kg**

$s_2 + (q_H / T_H) + s_{Gen} = s_3$ and $s_2 = s_1$ (from pump analysis)

$$s_{gen} = 7.2588 - 0.6386 - \frac{3473}{700 + 273} = \textbf{3.05 kJ/kg K}$$

11.62

Consider the power plant in Problem 11.39. Assume the high temperature source is a flow of liquid water at 120°C into a heat exchanger at constant pressure 300 kPa and that the water leaves at 90°C. Assume the condenser rejects heat to the ambient which is at -20°C. List all the places that have entropy generation and find the entropy generated in the boiler heat exchanger per kg ammonia flowing.

Solution:

a) The hot water/ammonia boiler.

b) The condensing ammonia (-15°C) to the ambient (-20°C) heat transfer.

c) The "feedwater" heater has mixing of a flow at state 6 with a flow at state 2.

State 3: $x_3 = 0$, $h_3 = 171.65$ kJ/kg, $v_3 = 0.00156$ m^3/kg, $s_3 = 0.6793$ kJ/kgK

State 5: $h_5 = 1614.6$ kJ/kg, $s_5 = 5.4971$ kJ/kg K

C.V Pump P2 (rev. and adiabatic so $s_4 = s_3$).

$$w_{P2} = h_4 - h_3 = v_3(P_4 - P_3) = 0.00156(1000 - 400) = 0.936 \text{ kJ/kg}$$

$$\Rightarrow h_5 - h_4 = h_5 - h_3 - w_{P2} = 1614.6 - 171.65 - 0.936 = 1442 \text{ kJ/kg}$$

C.V. Boiler: Energy Eq.: $0 = \dot{m}_{amm}(h_5 - h_4) + \dot{m}_{H2O}(h_{in} - h_{ex})$

$$\dot{m}_{H2O} / \dot{m}_{amm} = \frac{h_5 - h_4}{h_{in} - h_{ex}} = \frac{1442}{503.69 - 376.9} = 11.373$$

Entropy Eq.: $0 = \dot{m}_{amm}(s_4 - s_5) + \dot{m}_{H2O}(s_{in} - s_{ex}) + \dot{S}_{gen}$

$$s_{amm} = (s_5 - s_4) - (\dot{m}_{H2O} / \dot{m}_{amm})(s_{in} - s_{ex})$$
$$= 5.4971 - 0.6793 - 11.373(1.5275 - 1.1924) = \mathbf{1.007 \text{ kJ/kgK}}$$

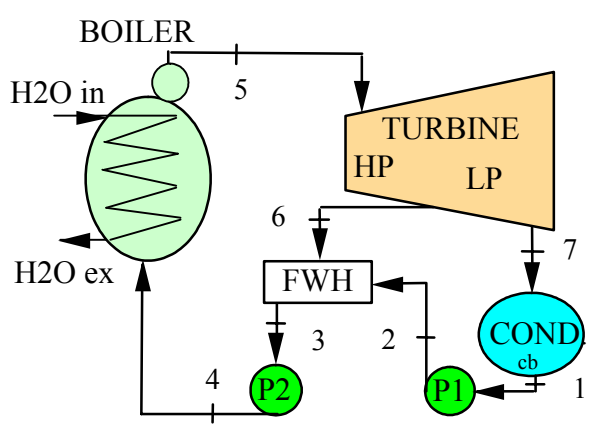

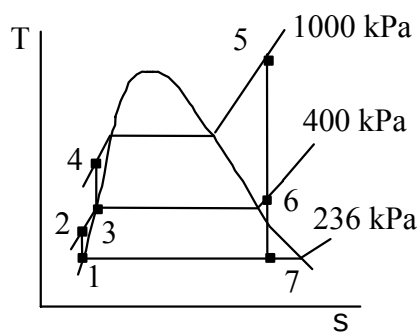

11.63

A small steam power plant has a boiler exit of 3 MPa, 400°C while it maintains 50 kPa in the condenser. All the components are ideal except the turbine which has an isentropic efficiency of 80% and it should deliver a shaft power of 9.0 MW to an electric generator. Find the specific turbine work , the needed flow rate of steam and the cycle efficiency.

Solution:

This is a standard Rankine cycle with an actual non-ideal turbine.

CV Turbine (Ideal):

$s_{4s} = s_3 = 6.9211$ kJ/kg K, $x_{4s} = (6.9211 - 1.091)/6.5029 = 0.8965$

$h_{4s} = 2407.35$ kJ/kg, $h_3 = 3230.8$ kJ/kg

=> $w_{Ts} = h_3 - h_{4s} = 823.45$ kJ/kg

CV Turbine (Actual):

$w_{Tac} = \eta_T \times w_{Ts} = \mathbf{658.76} = h_3 - h_{4ac}$, => $h_{4ac} = 2572$ kJ/kg

$\dot{m} = \dot{W} / w_{Tac} = 9000/658.76 = \mathbf{13.66\ kg/s}$

C.V. Pump:

$w_P = h_2 - h_1 = v_1(P_2 - P_1) = 0.00103\ (3000 - 50) = 3.04$ kJ/kg

=> $h_2 = h_1 + w_P = 340.47 + 3.04 = 343.51$ kJ/kg

C.V. Boiler: $q_H = h_3 - h_2 = 3230.8 - 343.51 = 2887.3$ kJ/kg

$\eta_{cycle} = (w_{Tac} - w_P) / q_H = (658.76 - 3.04) / 2887.3 = \mathbf{0.227}$

11.64

A steam power plant has a high pressure of 5 MPa and maintains 50°C in the condenser. The boiler exit temperature is 600°C. All the components are ideal except the turbine which has an actual exit state of saturated vapor at 50°C. Find the cycle efficiency with the actual turbine and the turbine isentropic efficiency.

Solution:

A standard Rankine cycle with an actual non-ideal turbine.

Boiler exit: $h_3 = 3666.5$ kJ/kg, $s_3 = 7.2588$ kJ/kg K

Ideal Turbine: 4s: 50°C, $s = s_3$ => $x = (7.2588 - 0.7037)/7.3725 = 0.88913$,

$h_{4s} = 209.31 + 0.88913 \times 2382.75 = 2327.88$ kJ/kg

=> $w_{Ts} = h_3 - h_{4s} = 1338.62$ kJ/kg

Condenser exit: $h_1 = 209.31$, Actual turbine exit: $h_{4ac} = h_g = 2592.1$

Actual turbine: $w_{Tac} = h_3 - h_{4ac} = 1074.4$ kJ/kg

$\eta_T = w_{Tac} / w_{Ts} =$ **0.803: Isentropic Efficiency**

Pump: $w_P = v_1(P_2 - P_1) = 0.001012(5000-12.35) = 5.05$ kJ/kg

$h_2 = h_1 + w_P = 209.31 + 5.05 = 214.36$ kJ/kg

$q_H = h_3 - h_2 = 3666.5 - 214.36 = 3452.14$ kJ/kg

$\eta_{cycle} = (w_{Tac} - w_P) / q_H =$ **0.31: Cycle Efficiency**

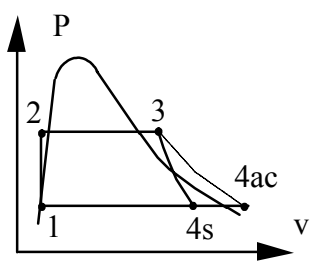

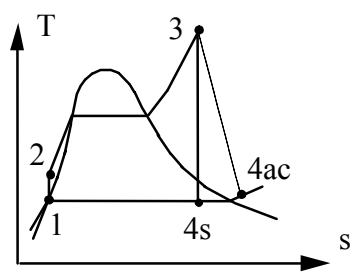

11.65

A steam power plant operates with a high pressure of 4 MPa and has a boiler exit of 600°C receiving heat from a 700°C source. The ambient at 20°C provides cooling to maintain the condenser at 60°C, all components are ideal except for the turbine which has an isentropic efficiency of 92%. Find the ideal and the actual turbine exit qualities. Find the actual specific work and specific heat transfer in all four components.

Solution:

A standard Rankine cycle with an actual non-ideal turbine.

Boiler exit: $h_3 = 3674.44$ kJ/kg, $s_3 = 7.3688$ kJ/kg K

Condenser exit: $h_1 = 251.11$ kJ/kg,

Ideal Turbine: 4s: 50°C, $s = s_3 \Rightarrow x_{4s} = (7.3688 - 0.8311)/7.0784 = \mathbf{0.9236}$,

$h_{4s} = 251.11 + 0.9236 \times 2358.48 = 2429.43$ kJ/kg

$\Rightarrow \quad w_{Ts} = h_3 - h_{4s} = 1245.01$ kJ/kg

Actual turbine: $w_{Tac} = \eta_{T\,s} w_{Ts} = 0.92 \times 1245.01 = \mathbf{1074.4\ kJ/kg} = h_3 - h_{4ac}$

$h_{4ac} = h_3 - w_{Tac} = 3674.44 - 1145.4 = 2529.04$ kJ/kg

$x_{4ac} = (2529.04 - 251.11)/2358.48 = \mathbf{0.96585}$

Pump: $w_P = v_1(P_2 - P_1) = 0.001017(4000 - 19.94) = \mathbf{4.05\ kJ/kg}$

$h_2 = h_1 + w_P = 251.11 + 4.05 = 255.16$ kJ/kg

$q_H = h_3 - h_2 = 3674.44 - 255.16 = \mathbf{3419.3\ kJ/kg}$

$q_L = h_{4ac} - h_1 = 2529.04 - 251.11 = \mathbf{2277.9\ kJ/kg}$

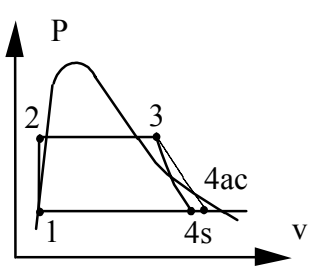

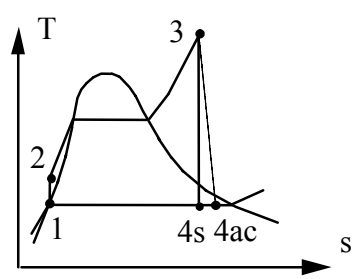

11.66

For the previous Problem find also the specific entropy generation in the boiler heat source setup.

CV. Boiler out to the source.

Entropy Eq.: $s_2 + \dfrac{q_H}{T_{source}} + s_{gen} = s_3$

State 1: Sat. liquid $h_1 = 251.11$ kJ/kg, $s_1 = 0.8311$ kJ/kgK

Pump: $w_P = v_1(P_2 - P_1) = 0.001017(4000 – 19.94) = 4.05$ kJ/kg

State 2: $h_2 = h_1 + w_P = 251.11 + 4.05 = 255.16$ kJ/kg, $s_2 = s_1$

State 3: $h_3 = 3674.44$ kJ/kg, $s_3 = 7.3688$ kJ/kgK

Boiler: $q_H = h_3 – h_2 = 3674.44 – 255.16 = 3419.3$ kJ/kg

$$s_{gen} = s_3 – s_2 – \frac{q_H}{T_{source}} = 7.3688 – 0.8311 – \frac{3419.3}{700 + 273} = \mathbf{3.023\ kJ/kgK}$$

11.67

Repeat Problem 11.43 assuming the turbine has an isentropic efficiency of 85%.

The physical components and the T-s diagram is as shown in Fig. 11.10 in the main text for one open feedwater heater. The same state numbering is used. From the Steam Tables:

State 5: (P, T) $h_5 = 4069.8$ kJ/kg, $s_5 = 7.0544$ kJ/kg K,

State 1: (P, x = 0) $h_1 = 191.81$ kJ/kg, $v_1 = 0.00101$ m^3/kg

State 3: (P, x = 0) $h_3 = 762.8$ kJ/kg, $v_3 = 0.001127$ m^3/kg

Pump P1: $w_{P1} = v_1(P_2 - P_1) = 0.00101 \times 990 = 1$ kJ/kg

$$h_2 = h_1 + w_{P1} = 192.81 \text{ kJ/kg}$$

Turbine 5-6: $s_6 = s_5 \Rightarrow h_6 = 3013.7$ kJ/kg

$$w_{T56,s} = h_5 - h_6 = 4069.8 - 3013.7 = 1056.1 \text{ kJ/kg}$$

$$\Rightarrow w_{T56,AC} = 1056.1 \times 0.85 = 897.69 \text{ kJ/kg}$$

$$w_{T56,AC} = h_5 - h_{6AC} \Rightarrow h_{6AC} = h_5 - w_{T56,AC}$$

$$= 4069.8 - 897.69 = 3172.11 \text{ kJ/kg}$$

Feedwater Heater ($\dot{m}_{TOT} = \dot{m}_5$): $x\dot{m}_5 h_{6AC} + (1 - x)\dot{m}_5 h_2 = \dot{m}_5 h_3$

$$\Rightarrow \quad x = \frac{h_3 - h_2}{h_6 - h_2} = \frac{762.8 - 192.81}{3172.11 - 192.81} = \mathbf{0.1913}$$

To get the turbine work apply the efficiency to the whole turbine. (i.e. the first section should be slightly different).

$$s_{7s} = s_{6s} = s_5 \Rightarrow x_{7s} = (7.0544 - 0.6493)/7.5009 = 0.85391,$$

$$h_{7s} = 191.81 + 0.85391 \times 2392.82 = 2235.1 \text{ kJ/kg}$$

$$w_{T57,s} = h_5 - h_{7s} = 4069.8 - 2235.1 = 1834.7 \text{ kJ/kg}$$

$$w_{T57,AC} = w_{T57,s}\eta_T = 1559.5 = h_5 - h_{7AC} \Rightarrow h_{7AC} = 2510.3 \text{ kJ/kg}$$

Find specific turbine work to get total flow rate

$$\dot{m}_{TOT} = \frac{\dot{W}_T}{x w_{T56} + (1-x) w_{T57}} = \frac{5000}{0.1913 \times 897.69 + 0.8087 \times 1559.5} = \mathbf{3.489\ kg/s}$$

$$\dot{Q}_L = \dot{m}_{TOT}(1 - x)(h_7 - h_1) = 3.489 \times 0.8087(2510.3 - 191.81) = \mathbf{6542\ kW}$$

11.68

Steam leaves a power plant steam generator at 3.5 MPa, 400°C, and enters the turbine at 3.4 MPa, 375°C. The isentropic turbine efficiency is 88%, and the turbine exhaust pressure is 10 kPa. Condensate leaves the condenser and enters the pump at 35°C, 10 kPa. The isentropic pump efficiency is 80%, and the discharge pressure is 3.7 MPa. The feedwater enters the steam generator at 3.6 MPa, 30°C. Calculate the thermal efficiency of the cycle and the entropy generation for the process in the line between the steam generator exit and the turbine inlet, assuming an ambient temperature of 25°C.

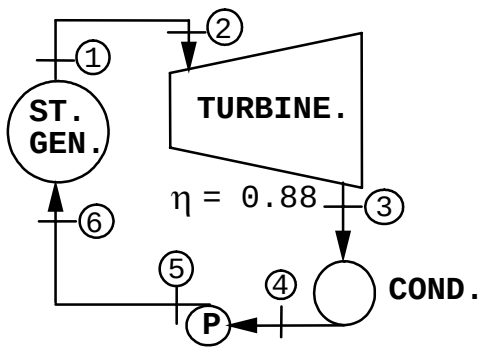

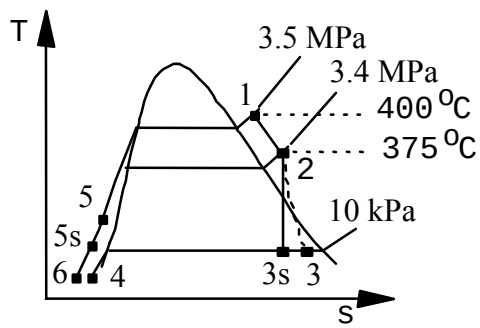

1: $h_1 = 3222.3$ kJ/kg, $s_1 = 6.8405$ kJ/kg K,

2: $h_2 = 3165.7$ kJ/kg, $s_2 = 6.7675$ kJ/kg K

3s: $s_{3S} = s_2 \Rightarrow x_{3S} = 0.8157$, $h_{3S} = 2143.6$ kJ/kg

$w_{T,S} = h_2 - h_{3S} = 3165.7 - 2143.6 = 1022.1$ kJ/kg

$w_{T,AC} = \eta w_{T,S} = 899.4$ kJ/kg, 3ac: $h_3 = h_2 - w_{T,AC} = 2266.3$ kJ/kg

$-w_{P,S} = v_f(P_5 - P_4) = 0.001006(3700 - 10) = 3.7$ kJ/kg

$-w_{P,AC} = -w_{P,S}/\eta_P = 4.6$ kJ/kg

$q_H = h_1 - h_6 = 3222.3 - 129.0 = 3093.3$ kJ/kg

$\eta = w_{NET}/q_H = (899.4 - 4.6)/3093.3 =$ **0.289**

C.V. Line from 1 to 2: $w = \emptyset$,

Energy Eq.: $q = h_2 - h_1 = 3165.7 - 3222.3 = -56.6$ kJ/kg

Entropy Eq.: $s_1 + s_{gen} + q/T_0 = s_2 \Rightarrow$

$s_{gen} = s_2 - s_1 - q/T_0 = 6.7675 - 6.8405 - (-56.6/298.15) =$ **0.117 kJ/kg K**

Cogeneration

11.69

A cogenerating steam power plant, as in Fig. 11.13, operates with a boiler output of 25 kg/s steam at 7 MPa, 500°C. The condenser operates at 7.5 kPa and the process heat is extracted as 5 kg/s from the turbine at 500 kPa, state 6 and after use is returned as saturated liquid at 100 kPa, state 8. Assume all components are ideal and find the temperature after pump 1, the total turbine output and the total process heat transfer.

Solution:

Pump 1: Inlet state is saturated liquid: $h_1 = 168.79$ kJ/kg, $v_1 = 0.001008$ m^3/kg

$$w_{P1} = \int v\, dP = v_1 (P_2 - P_1) = 0.001008(100 - 7.5) = 0.093 \text{ kJ/kg}$$

$$w_{P1} = h_2 - h_1 \Rightarrow h_2 = h_1 + w_{P1} = 168.88 \text{ kJ/kg}, \quad T_2 = \mathbf{40.3°C}$$

Turbine: $h_5 = 3410.3$ kJ/kg, $s_5 = 6.7974$ kJ/kg K

$$P_6, s_6 = s_5 \Rightarrow x_6 = 0.9952, \quad h_6 = 2738.6 \text{ kJ/kg}$$

$$P_7, s_7 = s_5 \Rightarrow x_7 = 0.8106, \quad h_7 = 2119.0 \text{ kJ/kg}$$

From the continuity equation we have the full flow from 5 to 6 and the remainder after the extraction flow is taken out flows from 6 to 7.

$$\dot{W}_T = \dot{m}_5 (h_5 - h_6) + 0.80\dot{m}_5 (h_6 - h_7) = 25 (3410.3 - 2738.6)$$
$$+ 20 (2738.6 - 2119) = 16\,792.5 + 12\,392 = \mathbf{29.185\ MW}$$

$$\dot{Q}_{proc} = \dot{m}_6(h_6 - h_8) = 5(2738.6 - 417.46) = \mathbf{11.606\ MW}$$

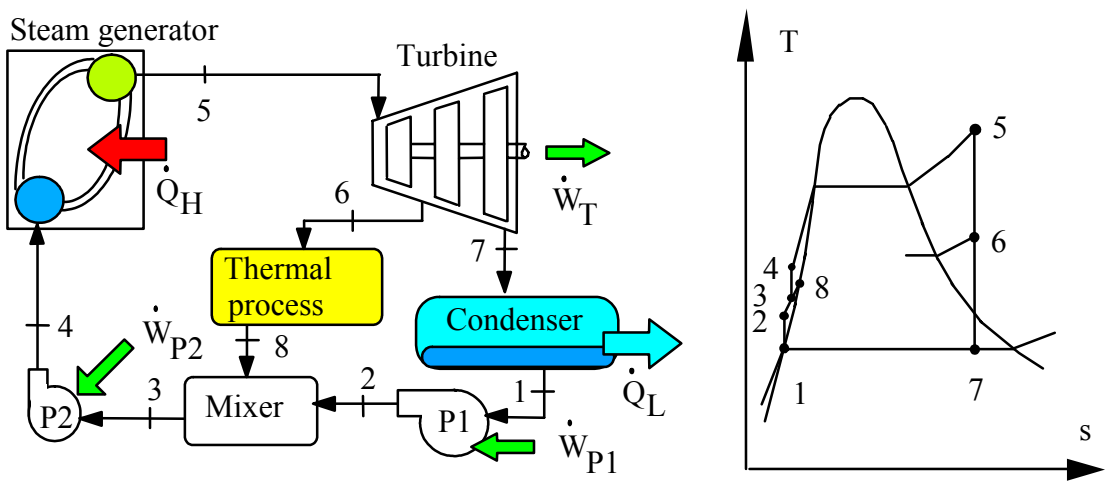

11.70

A steam power plant has 4 MPa, 500°C into the turbine and to have the condenser itself deliver the process heat it is run at 101 kPa. How much net power as work is produced for a process heat of 10 MW.

Solution:

From the Rankine cycle we have the states:

1: 101 kPa, $x = \emptyset$, $v_1 = 0.001043\ m^3/kg$, $h_1 = 418.6$ kJ/kg

3: 4 MPa, 500°C, $h_3 = 3445.2$ kJ/kg, $s_3 = 7.090$ kJ/kg K

C.V. Turbine: $s_4 = s_3 \Rightarrow x_4 = (7.090 - 1.3068)/6.048 = 0.9562$,

$$h_4 = 419.02 + 0.9562 \times 2257.03 = 2577.2 \text{ kJ/kg}$$

$$w_T = h_3 - h_4 = 3445.2 - 2577.2 = 868 \text{ kJ/kg}$$

C.V. Pump: $w_P = v_1(P_2 - P_1) = 0.001043(4000 - 101) = 4.07$ kJ/kg

$$w_P = h_2 - h_1 \Rightarrow h_2 = 419.02 + 4.07 = 423.09 \text{ kJ/kg}$$

C.V. Condenser: $q_{L,out} = h_4 - h_1 = 2577.2 - 419.02 = 2158.2$ kJ/kg

$$\dot{m} = \dot{Q}_{proc} / q_{L,out} = 10\,000 \text{ kW} / 2158.2 \text{ kJ/kg} = 4.633 \text{ kg/s}$$

$$\dot{W}_T = \dot{m}\,(w_T - w_P) = 4.633\,(868 - 4.07) = \mathbf{4002\ kW}$$

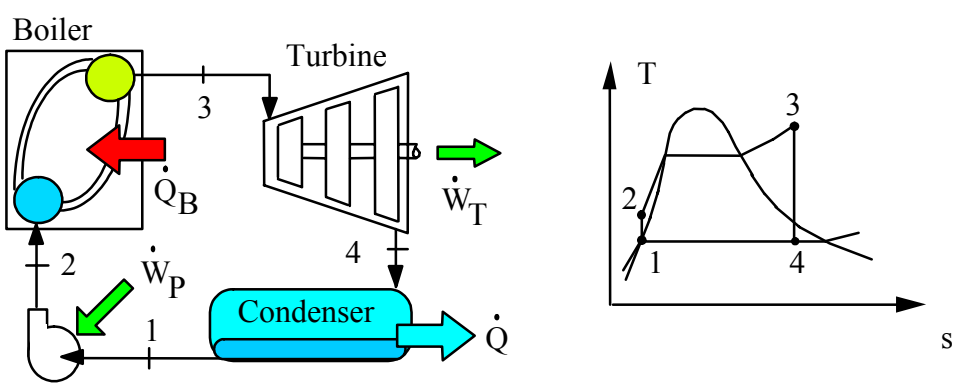

11.71

A 10 kg/s steady supply of saturated-vapor steam at 500 kPa is required for drying a wood pulp slurry in a paper mill. It is decided to supply this steam by cogeneration, that is, the steam supply will be the exhaust from a steam turbine. Water at 20°C, 100 kPa, is pumped to a pressure of 5 MPa and then fed to a steam generator with an exit at 400°C. What is the additional heat transfer rate to the steam generator beyond what would have been required to produce only the desired steam supply? What is the difference in net power?

Solution:

Desired exit State 4: P_4 = 500 kPa, sat. vap. => $x_4 = 1.0$, $T_4 = 151.9°C$

$$h_4 = h_g = 2748.7 \text{ kJ/kg}, \quad s_4 = s_g = 6.8212 \text{ kJ/kg-K}$$

Inlet State: 20°C, 100 kPa $h_1 = h_f = 83.94$ kJ/kg, $v_1 = v_f = 0.001002$ m^3/kg

Without Cogeneration; The water is pumped up to 500 kPa and then heated in the steam generator to the desired exit T.

C.V. Pump: $w_{Pw/o} = v_1(P_4 - P_1) = 0.4$ kJ/kg

$$h_2 = h_1 + w_{Pw/o} = 84.3 \text{ kJ/kg}$$

C.V. Steam Generator: $q_{w/o} = h_4 - h_2 = 2664.4$ kJ/kg

With Cogeneration; The water is pumped to 5 MPa, heated in the steam generator to 400°C and then flows through the turbine with desired exit state.

C.V. Pump: $w_{Pw} = \int vdP = v_1(P_2 - P_1) = 4.91$ kJ/kg

$$h_2 = h_1 + w_{Pw} = 88.85 \text{ kJ/kg}$$

C.V. Steam Generator: Exit 400°C, 5 MPa => $h_3 = 3195.64$ kJ/kg

$$q_w = h_3 - h_2 = 3195.64 - 88.85 = 3106.8 \text{ kJ/kg}$$

C.V.: Turbine, Inlet and exit states given

$$w_t = h_3 - h_4 = 3195.64 - 2748.7 = 446.94 \text{ kJ/kg}$$

Comparison

Additional Heat Transfer: $q_w - q_{w/o} = 3106.8 - 2664.4 = 442.4$ kJ/kg

$$\dot{Q}_{extra} = \dot{m}(q_w - q_{w/o}) = \mathbf{4424\ kW}$$

Difference in Net Power: $w_{diff} = (w_t - w_{Pw}) + w_{Pw/o}$,

$$w_{diff} = 446.94 - 4.91 + 0.4 = 442.4 \text{ kJ/kg}$$

$$\dot{W}_{diff} = \dot{m} w_{diff} = \mathbf{4424\ kW}$$

By adding the extra heat transfer at the higher pressure and a turbine all the extra heat transfer can come out as work (it appears as a 100% efficiency)

11.72

A boiler delivers steam at 10 MPa, 550°C to a two-stage turbine as shown in Fig. 11.17. After the first stage, 25% of the steam is extracted at 1.4 MPa for a process application and returned at 1 MPa, 90°C to the feedwater line. The remainder of the steam continues through the low-pressure turbine stage, which exhausts to the condenser at 10 kPa. One pump brings the feedwater to 1 MPa and a second pump brings it to 10 MPa. Assume the first and second stages in the steam turbine have isentropic efficiencies of 85% and 80% and that both pumps are ideal. If the process application requires 5 MW of power, how much power can then be cogenerated by the turbine?

Solution:

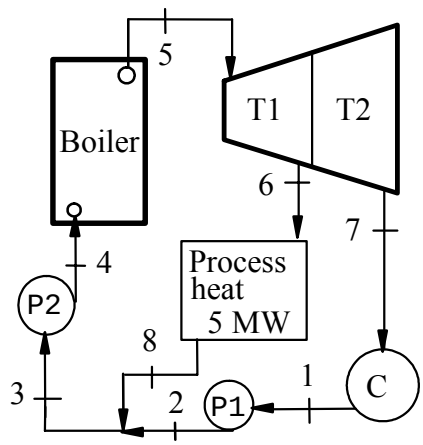

5: $h_5 = 3500.9$, $s_5 = 6.7561$ kJ/kg K

First ideal turbine T1

6: $s_6 = s_5 \Rightarrow h_6 = 2932.4$ kJ/kg

$w_{T1} = h_5 - h_6 = 568.5$ kJ/kg

Ideal turbine T2

State 7: $s_7 = s_6 = s_5$

$$x = \frac{6.7561 - 0.6492}{7.501} = 0.8141$$

$\Rightarrow \quad h_7 = 2139.9$ kJ/kg

$w_{T2} = h_6 - h_7 = 2932.4 - 2139.9 = 792.5$ kJ/kg

Now do the process heat requirement

8: $h_8 = 377.3$ kJ/kg, approx. from the compressed liq. Table at 500 kPa

$q_{PROC} = h_6 - h_8 = 2932.4 - 377.3 = 2555.1$ kJ/kg

$\dot{m}_6 = \dot{Q}/q_{PROC} = 5000 / 2555.1 = 1.9569$ kg/s $= 0.25\ \dot{m}_{TOT}$

$\Rightarrow \quad \dot{m}_{TOT} = \dot{m}_5 = 7.8275$ kg/s, $\dot{m}_7 = \dot{m}_5 - \dot{m}_6 = 5.8706$ kg/s

$$\dot{W}_T = \dot{m}_5 h_5 - \dot{m}_6 h_6 - \dot{m}_7 h_7$$
$$= 7.8275 \times 3500.9 - 1.9569 \times 2932.4 - 5.8706 \times 2139.9$$
$$= \mathbf{9102\ kW}$$

11.73

In a cogenerating steam power plant the turbine receives steam from a high-pressure steam drum and a low-pressure steam drum as shown in Fig. P11.65. The condenser is made as two closed heat exchangers used to heat water running in a separate loop for district heating. The high-temperature heater adds 30 MW and the low-temperature heaters adds 31 MW to the district heating water flow. Find the power cogenerated by the turbine and the temperature in the return line to the deaerator.

Solution:

Inlet states from Table B.1.3

$h_1 = 3445.9$ kJ/kg, $s_1 = 6.9108$ kJ/kg K

$h_2 = 2855.4$ kJ/kg, $s_2 = 7.0592$ kJ/kg K

$\dot{m}_{TOT} = \dot{m}_1 + \dot{m}_2 = 27$ kg/s

Assume a reversible turbine and the two flows can mix without s generation.

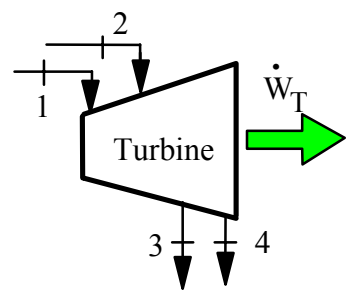

Energy Eq.6.10: $\dot{m}_1 h_1 + \dot{m}_2 h_2 = \dot{m}_3 h_3 + \dot{m}_4 h_4 + \dot{W}_T$

Entropy Eq.9.7: $\dot{m}_1 s_1 + \dot{m}_2 s_2 = \dot{m}_{TOT} s_{mix} \Rightarrow s_{MIX} = 6.9383$ kJ/kg K

State 3: $s_3 = s_{MIX} \Rightarrow h_3 = 2632.4$ kJ/kg, $x_3 = 0.966$

State 4: $s_4 = s_{MIX} \Rightarrow h_4 = 2413.5$ kJ/kg, $x_4 = 0.899$

$$\dot{W}_T = 22 \times 3445.9 + 5 \times 2855.4 - 13 \times 2632.4 - 14 \times 2413.5$$
$$= 22\,077 \text{ kW} = \mathbf{22\ MW}$$

District heating line $\dot{Q}_{TOT} = \dot{m}(h_{95} - h_{60}) = 60\,935$ kW

OK, this matches close enough

C.V. Both heaters: $\dot{m}_3 h_3 + \dot{m}_4 h_4 - \dot{Q}_{TOT} = \dot{m}_{TOT} h_{EX}$

$$13 \times 2632.4 - 14 \times 2413.5 - 60\,935 = 7075.2 = 27 \times h_{EX}$$

$h_{EX} = 262 \approx h_f \Rightarrow T_{EX} = \mathbf{62.5°C}$

Remark: We could have computed the expansion from state 1 to P_2 followed by a mixing process to find a proper state 2a from which we expand down to P_3 and P_4

11.74

A smaller power plant produces 25 kg/s steam at 3 MPa, 600°C, in the boiler. It cools the condenser to an exit of 45°C and the cycle is shown in Fig. P11.67. There is an extraction done at 500 kPa to an open feedwater heater, and in addition a steam supply of 5 kg/s is taken out and not returned. The missing 5 kg/s water is added to the feedwater heater from a 20°C, 500 kPa source. Find the needed extraction flow rate to cover both the feedwater heater and the steam supply. Find the total turbine power output.

Solution:

The states properties from Tables B.1.1 and B.1.3

1: 45°C, x = 0: h_1 = 188.42 kJ/kg, v_1 = 0.00101 m^3/kg, P_{sat} = 9.59 kPa

5: 3.0 MPa, 600°C: h_5 = 3682.34 kJ/kg, s_5 = 7.5084 kJ/kg K

3: 500 kPa, x = 0: h_3 = 640.21 kJ/kg 8: h_8 = 84.41 kJ/kg

6: 500 kPa, $s_6 = s_5$ from HP turbine, h_6 = 3093.26 kJ/kg

C.V. Pump 1. Reversible and adiabatic. Incompressible so v = constant

Energy: $w_{p1} = h_2 - h_1 = \int v\, dP = v_1(P_2 - P_1)$

$= 0.00101\ (500 - 9.6) = 0.495$ kJ/kg

$h_2 = h_1 + w_{p1} = 188.42 + 0.495 = 188.915$ kJ/kg

C.V. Turbine sections

Entropy Eq.: $s_7 = s_5 = 7.5084$ kJ/kg K => two-phase state

$s_7 = 7.5084 = 0.6386 + x_7 \times 7.5261 \Rightarrow x_7 = 0.9128$

$h_7 = 188.42 + 0.9128 \times 2394.77 = 2374.4$ kJ/kg

C.V. Feedwater heater, including the make-up water flow, $x = \dot{m}_6/\dot{m}_5$.

Energy eq.: $\dot{m}_8 h_8 + (\dot{m}_5 - \dot{m}_6)h_2 + (\dot{m}_6 - \dot{m}_8)h_6 = \dot{m}_5 h_3$

Divide by $\dot{m}_5$ and solve for x

$$x = \frac{h_3 - h_2 + (h_6 - h_8)\,\dot{m}_8/\dot{m}_5}{h_6 - h_2} = \frac{640.21 - 188.915 + (3093.26 - 84.41)5/25}{3093.26 - 188.915}$$

$= 0.3626$

$\dot{m}_6 = x\,\dot{m}_5 = 0.3626 \times 25 =$ **9.065 kg/s**

C.V. Turbine energy equation

$\dot{W}_T = \dot{m}_5 h_5 - \dot{m}_6 h_6 - \dot{m}_7 h_7$

$= 25 \times 3682.34 - 9.065 \times 3093.26 - 16.935 \times 2374.4$

= 26 182 kW

Refrigeration cycles

11.75

A refrigerator with R-134a as the working fluid has a minimum temperature of −10°C and a maximum pressure of 1 MPa. Assume an ideal refrigeration cycle as in Fig. 11.21. Find the specific heat transfer from the cold space and that to the hot space, and the coefficient of performance.

Solution:

Exit evaporator sat. vapor −10°C from B.5.1: $h_1 = 392.28$, $s_1 = 1.7319$ kJ/kgK

Exit condenser sat. liquid 1 MPa from B.5.1: $h_3 = 255.60$ kJ/kg

Compressor: $s_2 = s_1$ & P_2 from B.5.2 $\Rightarrow$ $h_2 \approx 425.68$ kJ/kg

Evaporator: $q_L = h_1 - h_4 = h_1 - h_3 = 392.28 - 255.60 =$ **136.7 kJ/kg**

Condenser: $q_H = h_2 - h_3 = 425.68 - 255.60 =$ **170.1 kJ/kg**

COP: $\beta = q_L/w_c = q_L/(q_H - q_L) =$ **4.09**

Ideal refrigeration cycle
$P_{cond} = P_3 = P_2 = 1$ MPa
$T_{evap} = -10^oC = T_1$

Properties from Table B.5

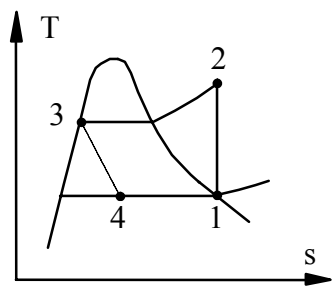

11.76

Repeat the previous Problem with R-410a as the working fluid. Will that work in an ordinary kitchen?

Solution:

Exit evaporator sat. vapor –10°C from B.4.1: $h_1 = 275.78$, $s_1 = 1.0567$ kJ/kgK

Exit condenser sat. liquid 1 MPa from B.4.1: $h_3 = 68.92$ kJ/kg

Compressor: $s_2 = s_1$ & P_2 from B.4.2 $\Rightarrow$ $h_2 \approx 290.81$ kJ/kg

Evaporator: $q_L = h_1 - h_4 = h_1 - h_3 = 275.78 - 68.92 =$ **206.9 kJ/kg**

Condenser: $q_H = h_2 - h_3 = 290.81 - 68.92 =$ **221.9 kJ/kg**

COP: $\beta = q_L/w_c = q_L/(q_H - q_L) =$ **13.8**

Ideal refrigeration cycle
$P_{cond} = P_3 = P_2 = 1$ MPa
$T_{evap} = -10^oC = T_1$

Properties from Table B.4

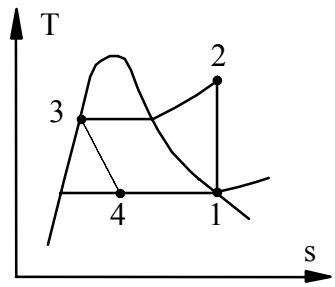

The 1 MPa is too small, the condensing temperature is 7.25°C and the q_H in the condenser can not be rejected to a kitchen normally at 20°C.

11.77

Consider an ideal refrigeration cycle that has a condenser temperature of 45°C and an evaporator temperature of –15°C. Determine the coefficient of performance of this refrigerator for the working fluids R-134a and R-410a.

Solution:

Ideal refrigeration cycle

$T_{cond} = 45^oC = T_3$

$T_{evap} = -15^oC = T_1$

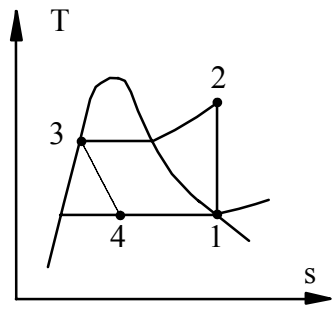

	Property for:	R-134a, B.5	R-410a, B.4
Compressor	h_1, kJ/kg	389.2	273.9
	$s_2 = s_1$, kJ/kg K	1.7354	1.0671
	P_2, MPa	1.16	2.7283
	T_2, ^oC	51.8*	71.5**
	h_2, kJ/kg	429.9*	322.72**
	$w_C = h_2 - h_1$	40.7	48.82
Exp. valve	$h_3 = h_4$, kJ/kg	264.11	133.61
Evaporator	$q_L = h_1 - h_4$	125.1	140.29
	$\beta = q_L/w_C$	**3.07**	**2.87**

* For state 2 an interpolation between 1 and 1.2 MPa is needed for 1.16 MPa:

At 1 MPa, s = 1.7354 : T = 45.9 °C and h = 426.8 kJ/kg

At 1.2 MPa, s = 1.7354 : T = 53.3 °C and h = 430.7 kJ/kg

** For state 2 an interpolation between 2 and 3 MPa is needed for 2.728 MPa:

At 2 MPa, s = 1.0671 : T = 54.68 °C and h = 313.942 kJ/kg

At 3 MPa, s = 1.0671 : T = 77.80 °C and h = 326.0 kJ/kg

It would make more sense to use the CATT3 program.

11.78

The natural refrigerant carbon dioxide has a fairly low critical temperature. Find the high temperature, the condensing temperature and the COP if it is used in a standard cycle with high and low pressures of 6 MPa and 3 MPa.

Exit evaporator x = 1 and 3 MPa from B.3.2:

$$h_1 = 320.71 \text{ kJ/kg}, \quad s_1 = 1.2098 \text{ kJ/kgK}$$

Exit condenser saturated liquid 6 MPa from B.3.1:

$$T_3 = \mathbf{22°C}, \quad h_3 = 150 \text{ kJ/kg}$$

Exit compressor: 6 MPa, $s = s_1$, so interpolate in B.3.2

$$T_2 = \mathbf{45.9°C}, \quad h_2 = 348.24 \text{ kJ/kg}$$

COP: $$\beta = \frac{q_L}{w_c} = \frac{h_1 - h_3}{h_2 - h_1} = \mathbf{6.2}$$

Remark: The condensing T is too low for a standard refrigerator.

11.79

Do problem 11.77 with ammonia as the working fluid.

Solution:

Ideal refrigeration cycle

$T_{cond} = 45^oC = T_3$

$T_{evap} = -15^oC = T_1$

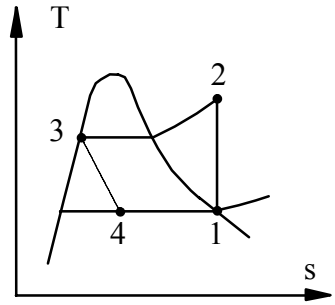

State 1: $h_1 = 1424.6$ kJ/kg, $s_1 = 5.5397$ kJ/kg-K

State 2: $s = s_1$, $P_2 = 1782$ kPa, $T_2 = 135.1^oC$, $h_2 = 1731.3$ kJ/kg

For state 2 an interpolation between 1.6 and 2 MPa is needed for 1.782 MPa:

At 1.6 MPa, s = 5.5397 : T = 126.0 °C and h = 1712.2 kJ/kg

At 2.0 MPa, s = 5.5397 : T = 146.1°C and h = 1754.1 kJ/kg

It would make more sense to use the CATT3 program.

$w_C = h_2 - h_1 = 1731.3 – 1424.6 = 306.7$ kJ/kg

State 3-4: $h_4 = h_3 = 396.3$ kJ/kg $q_L = h_1 - h_4 = 1028.3$ kJ/kg

$\beta = q_L/w_C$ **= 3.353**

11.80

A refrigerator receives 500 W of electrical power to the compressor driving the cycle flow of R-134a. The refrigerator operates with a condensing temperature of 40°C and a low temperature of -5°C. Find the COP for the cycle.

Solution:

Ideal refrigeration cycle

$T_{cond} = 40^oC = T_3$

$T_{evap} = -5^oC = T_1$

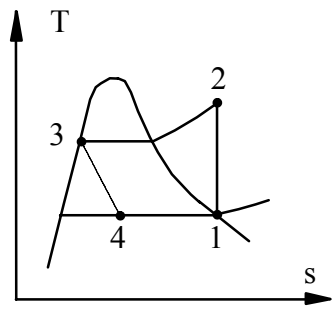

State 1: $h_1 = 395.3$ kJ/kg, $s_1 = 1.7288$ kJ/kg-K

State 2: $s = s_1$, $P_2 = P_3 = 1017$ kPa, $T_2 = 45^oC$, $h_2 = 425$ kJ/kg

$w_C = h_2 - h_1 = 425 - 395.3 = 29.7$ kJ/kg

State 3-4: $h_4 = h_3 = 256.5$ kJ/kg $q_L = h_1 - h_4 = 138.8$ kJ/kg

$\beta = q_L/w_C$ **= 4.67**

11.81

A heat pump for heat upgrade uses ammonia with a low temperature of 25°C and a high pressure of 5000 kPa. If it receives 1 MW of shaft work what is the rate of heat transfer at the high temperature?

State 1: h_1 = 1463.5 kJ/kg, s_1 = 5.0293 kJ/kgK

State 3: $h_3 = h_f$ = 631.9 kJ/kg

Entropy compressor: $s_2 = s_1$ => T_2 = 156°C, h_2 = 1709.1 kJ/kg

Energy eq. compressor: $w_C = h_2 - h_1$ = 245.6 kJ/kg

Energy condenser: $q_H = h_2 - h_3$ = 1077.2 kJ/kg

Scaling to power input: $\dot{Q}_H = q_H \dfrac{\dot{W}_{IN}}{w_C} = 1077.2 \dfrac{1000}{245.6} =$ **4386 kW**

11.82

Reconsider the heat pump in the previous problem. Assume the compressor is split into two, first compress to 2000 kPa, then take heat transfer out at constant P to reach saturated vapor then compress to the 5000 kPa. Find the two rates of heat transfer, at 2000 kPa and at 5000 kPa for a total of 1 MW shaft work input.

Ideal heat pump
$T_{evap} = 25^oC = T_1$

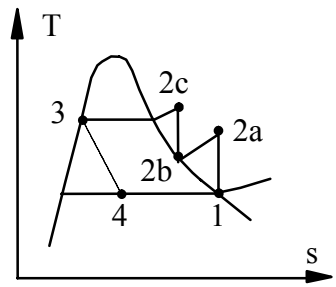

State 1: $h_1 = 1463.5$ kJ/kg, $s_1 = 5.0293$ kJ/kgK

State 3: $h_3 = h_f = 631.9$ kJ/kg

Entropy compressor 1: $s_{2a} = s_1$ => $T_{2a} = 75.3^oC$, $h_{2a} = 1559.1$ kJ/kg

Energy eq. compressor 1: $w_{C1} = h_{2a} - h_1 = 1559.1 – 1463.5 = 95.6$ kJ/kg

Exit heat exchanger 1: $h_{2b} = 1471.5$ kJ/kg, $s_{2b} = 4.768$ kJ/kgK

Entropy compressor 2: $s_{2c} = s_{2b}$ => $T_{2c} = 124.3^oC$, $h_{2c} = 1601.37$ kJ/kg

Energy eq. compressor 2: $w_{C2} = h_{2c} - h_{2b} = 1601.37 – 1471.5 = 129.87$ kJ/kg

Total power input: $\dot{W}_{IN} = \dot{m}\,(w_{C1} + w_{C2}) \Rightarrow$

$$\dot{m} = \frac{\dot{W}_{IN}}{w_{C1} + w_{C2}} = \frac{1000}{95.6 + 129.87} = 4.4352 \text{ kg/s}$$

Heat exchanger 1: $\dot{Q}_{H1} = \dot{m}(h_{2a} – h_{2b}) = 4.4352(1559.1\text{-}1471.5) =$ **388.5 kW**

Heat exchanger 2: $\dot{Q}_{H2} = \dot{m}(h_{2c} – h_3) = 4.4352(1601.37\text{-}631.9) =$ **4299.8 kW**

11.83

An air-conditioner in the airport of Timbuktu runs a cooling system using R-410a with a high pressure of 1500 kPa and a low pressure of 200 kPa. It should cool the desert air at 45°C down to 15°C. Find the cycle COP. Will the system work?

Solution:

Ideal refrigeration cycle
$P_{cond} = P_2 = P_3 = 1500$ kPa
$P_{evap} = P_1$

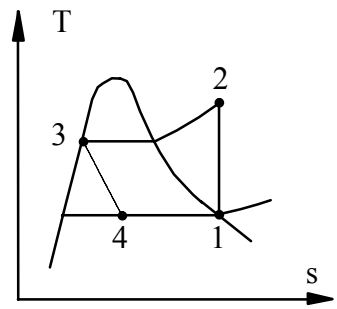

State 1: $T_1 = -37.0^oC$, $h_1 = 264.3$ kJ/kg, $s_1 = 1.119$ kJ/kg-K

State 2: $P_2 = 1500$ kPa, $s_2 = s_1$: $T_2 = 53.8^oC$, $h_2 = 322$ kJ/kg

$w_C = h_2 - h_1 = 322 – 264.3 = 57.7$ kJ/kg

State 3-4: $P_4 = P_3$, $x_3 = 0$: $T_3 = 21.4^oC$, $h_4 = h_3 = 91.55$ kJ/kg

$q_L = h_1 - h_4 = 264.3 – 91.55 = 172.75$ kJ/kg

$\beta = q_L/w_C$ = **3.0**

The heat rejection from 2-3 to ambient at 45°C has $T_3 = 21.4^oC$ not hot enough so the system will not work. The high pressure must be much higher so $T_3 > 45^oC$.

11.84

Consider an ideal heat pump that has a condenser temperature of 50°C and an evaporator temperature of 0°C. Determine the coefficient of performance of this heat pump for the working fluids R-134a and ammonia.

Solution:

Ideal heat pump

$T_{cond} = 50^oC = T_3$

$T_{evap} = 0^oC = T_1$

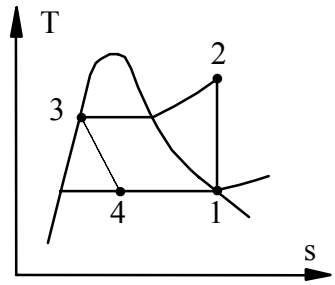

C.V.	Property for: From Table:	R-134a B.5	NH_3 B.2
	h_1, kJ/kg	398.36	1442.32
Compressor	$s_2 = s_1$, kJ/kgK	1.7262	5.3313
	P_2, MPa	1.3181	2.0333
	T_2, ^oC	55.1	115.6
	h_2, kJ/kg	429.55	1672.84
	$w_C = h_2 - h_1$	31.19	230.52
Exp. valve	$h_3 = h_4$, kJ/kg	271.83	421.58
Condenser	$q_H = h_2 - h_3$	157.72	1251.26
	$\beta' = q_H/w_C$	**5.06**	**5.428**

11.85

A refrigerator with R-134a as the working fluid has a minimum temperature of –10°C and a maximum pressure of 1 MPa. The actual adiabatic compressor exit temperature is 60°C. Assume no pressure loss in the heat exchangers. Find the specific heat transfer from the cold space and that to the hot space, the coefficient of performance and the isentropic efficiency of the compressor.

Solution:

State 1: Inlet to compressor, sat. vapor -10°C,

$h_1 = 392.28$, $s_1 = 1.7319$ kJ/kgK

State 2: Actual compressor exit, $h_{2AC} = 441.89$ kJ/kg

State 3: Exit condenser, sat. liquid 1MPa, $h_3 = 255.60$ kJ/kg

State 4: Exit valve, $h_4 = h_3$

C.V. Evaporator: $q_L = h_1 - h_4 = h_1 - h_3 = 392.28 - 255.60 =$ **136.7 kJ/kg**

C.V. Ideal Compressor: $w_{C,S} = h_{2,S} - h_1$, $s_{2,S} = s_1$

State 2s: 1 MPa, s = 1.7319 kJ/kg K; $T_{2,S} = 44.9°C$, $h_{2,S} = 425.7$ kJ /kg

$w_{C,S} = h_{2,S} - h_1 = 33.42$ kJ/kg

C.V. Actual Compressor: $w_C = h_{2,AC} - h_1 = 49.61$ kJ/kg

$\beta = \dfrac{q_L}{w_C} =$ **2.76,** $\eta_C = w_{C,S}/w_C =$ **0.674**

C.V. Condenser: $q_H = h_{2,AC} - h_3 =$ **186.3 kJ/kg**

Ideal refrigeration cycle
with actual compressor
$P_{cond} = P_3 = P_2 = 1$ MPa
$T_2 = 60^oC$
$T_{evap} = -10^oC = T_1$
Properties from Table B.5

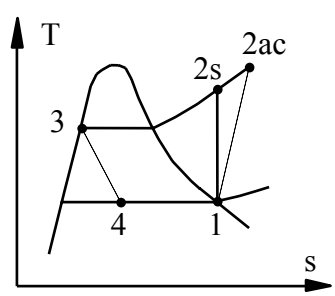

11.86

A refrigerator in a meat warehouse must keep a low temperature of -15°C and the outside temperature is 20°C. It uses ammonia as the refrigerant which must remove 5 kW from the cold space. Find the flow rate of the ammonia needed assuming a standard vapor compression refrigeration cycle with a condenser at 20°C.

Solution:

Basic refrigeration cycle: $T_1 = T_4 = -15°C$, $T_3 = 20°C$

Table B.3: $h_4 = h_3 = 274.3$ kJ/kg; $h_1 = h_g = 1424.6$ kJ/kg

$$\dot{Q}_L = \dot{m}_{amm} \times q_L = \dot{m}_{amm} (h_1 - h_4)$$

$$q_L = 1424.6 - 274.3 = 1150.3 \text{ kJ/kg}$$

$$\dot{m}_{amm} = 5.0 / 1150.3 = \mathbf{0.00435\ kg/s}$$

Ideal refrigeration cycle

$T_{cond} = 20^oC$

$T_{evap} = -15^oC = T_1$

Properties from Table B.2

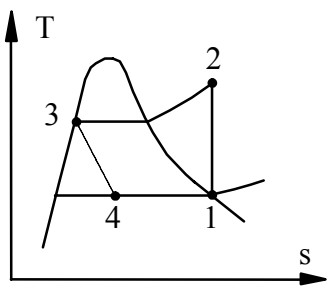

11.87

A refrigerator has a steady flow of R-410a as saturated vapor at –20°C into the adiabatic compressor that brings it to 1400 kPa. After the compressor, the temperature is measured to be 60°C. Find the actual compressor work and the actual cycle coefficient of performance.

Solution:

Table B.4.1: $h_1 = 271.89$ kJ/kg, $s_1 = 1.0779$ kJ/kg K

$P_2 = P_3 = 1400$ kPa, 18.88°C, $h_4 = h_3 = h_f = 87.45$ kJ/kg

$h_{2\,ac} = 330.07$ kJ/kg

C.V. Compressor (actual)

Energy Eq.: $w_{C\,ac} = h_{2\,ac} - h_1 = 330.07 - 271.89 =$ **58.18 kJ/kg**

C.V. Evaporator

Energy Eq.: $q_L = h_1 - h_4 = h_1 - h_3 = 271.89 - 87.45 = 184.44$ kJ/kg

$$\beta = \frac{q_L}{w_{C\,ac}} = \frac{184.44}{58.18} = \mathbf{3.17}$$

Ideal refrigeration cycle
with actual compressor

$T_{cond} = 18.88^oC = T_{sat\ 1400\ kPa}$

$T_2 = 60^oC$

$T_{evap} = -20^oC = T_1$

Properties from Table B.4

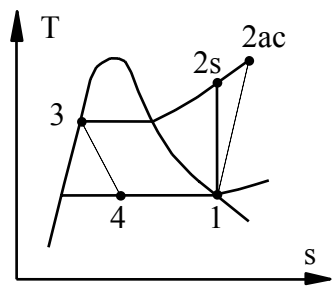

11.88

A heat pump uses R410a with a high pressure of 3000 kPa and an evaporator operating at 0^oC so it can absorb energy from underground water layers at 8^oC. Find the COP and the temperature it can deliver energy at.

Solution:

Ideal refrigeration cycle
R-401a
$P_{cond} = P_2 = P_3 = 3000$ kPa
$T_{evap} = 0^oC = T_1$

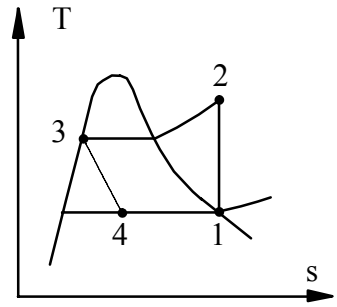

State 1: $h_1 = 279.1$ kJ/kg, $s_1 = 1.037$ kJ/kg-K

State 2: P_2, $s_2 = s_1$: $T_2 = 69.8^oC$, $h_2 = 315.4$ kJ/kg

$w_C = h_2 - h_1 = 315.4 - 279.1 = 36.3$ kJ/kg

State 3-4: $h_3 = h_4$, $x_3 = 0$: $T_3 = 49.1^oC$, $h_4 = h_3 = 141.7$ kJ/kg

$q_H = h_2 - h_3 = 315.4 - 141.7 = 173.7$ kJ/kg

$$\beta = q_H/w_C = \frac{173.7}{36.3} = \mathbf{4.785}$$

It can deliver heat at about $49^oC = T_3$ (minus a ΔT for the heat transfer rate)

11.89

The air conditioner in a car uses R-134a and the compressor power input is 1.5 kW bringing the R-134a from 201.7 kPa to 1200 kPa by compression. The cold space is a heat exchanger that cools atmospheric air from the outside 30°C down to 10°C and blows it into the car. What is the mass flow rate of the R-134a and what is the low temperature heat transfer rate. How much is the mass flow rate of air at 10°C?

Standard Refrigeration Cycle

Table B.5: $h_1 = 392.28$ kJ/kg; $s_1 = 1.7319$ kJ/kg K; $h_4 = h_3 = 266$ kJ/kg

C.V. Compressor (assume ideal)

$\dot{m}_1 = \dot{m}_2$ $\quad w_C = h_2 - h_1$; $\quad s_2 = s_1 + s_{gen}$

$P_2, s = s_1 \Rightarrow h_2 = 429.5$ kJ/kg $\Rightarrow w_C = 37.2$ kJ/kg

$\dot{m}\, w_C = \dot{W}_C \Rightarrow \dot{m} = 1.5 / 37.2 =$ **0.0403 kg/s**

C.V. Evaporator

$\dot{Q}_L = \dot{m}(h_1 - h_4) = 0.0405(392.28 - 266) =$ **5.21 kW**

C.V. Air Cooler

$\dot{m}_{air}\Delta h_{air} = \dot{Q}_L \approx \dot{m}_{air}C_p\Delta T$

$\dot{m}_{air} = \dot{Q}_L / (C_p\Delta T) = 5.21 / (1.004\times 20) =$ **0.26 kg / s**

Ideal refrigeration cycle

$P_{cond} = 1200$ kPa $= P_3$
$P_{evap} = 201.7$ kPa $= P_1$

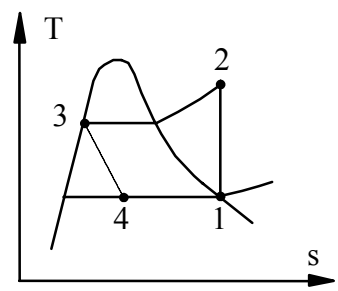

11.90

A refrigerator using R-134a is located in a 20°C room. Consider the cycle to be ideal, except that the compressor is neither adiabatic nor reversible. Saturated vapor at -20°C enters the compressor, and the R-134a exits the compressor at 50°C. The condenser temperature is 40°C. The mass flow rate of refrigerant around the cycle is 0.2 kg/s, and the coefficient of performance is measured and found to be 2.3. Find the power input to the compressor and the rate of entropy generation in the compressor process.

Solution:

Table B.5: $P_2 = P_3 = P_{sat\ 40C} = 1017$ kPa, $h_4 = h_3 = 256.54$ kJ/kg

$s_2 \approx 1.7472$ kJ/kg K, $h_2 \approx 430.87$ kJ/kg;

$s_1 = 1.7395$ kJ/kg K, $h_1 = 386.08$ kJ/kg

$\beta = q_L / w_C$ -> $w_C = q_L / \beta = (h_1 - h_4) / \beta = (386.08 - 256.54) / 2.3 = 56.32$

$\dot{W}_C = \dot{m}\, w_C =$ **11.26 kW**

C.V. Compressor $h_1 + w_C + q = h_2$ ->

$q_{in} = h_2 - h_1 - w_C = 430.87 - 386.08 - 56.32 = -11.53$ kJ/kg i.e. a heat loss

$s_1 + \int dQ/T + s_{gen} = s_2$

$s_{gen} = s_2 - s_1 - q / T_o = 1.7472 - 1.7395 + (11.53 / 293.15) = 0.047$ kJ/kg K

$\dot{S}_{gen} = \dot{m}\, s_{gen} = 0.2 \times 0.047 =$ **0.0094 kW / K**

Ideal refrigeration cycle
with actual compressor
$T_{cond} = 40^oC$
$T_2 = 50^oC$
$T_{evap} = -20^oC = T_1$
Properties from Table B.5

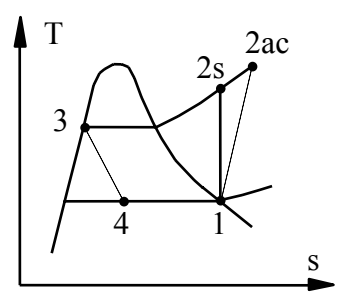

11.91

A small heat pump unit is used to heat water for a hot-water supply. Assume that the unit uses ammonia and operates on the ideal refrigeration cycle. The evaporator temperature is 15°C and the condenser temperature is 60°C. If the amount of hot water needed is 0.1 kg/s, determine the amount of energy saved by using the heat pump instead of directly heating the water from 15 to 60°C.

Solution:

Ideal ammonia heat pump

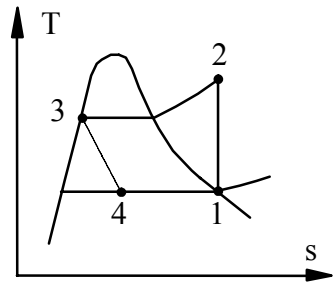

$T_1 = 15^oC$, $T_3 = 60^oC$
From Table B.2.1

$h_1 = 1456.3$ kJ/kg, $s_2 = s_1 = 5.1444$ kJ/kg K
$P_2 = P_3 = 2.614$ MPa, $h_3 = 472.8$ kJ/kg

Entropy compressor: $s_2 = s_1$ => $T_2 = 111.6^oC$, $h_2 = 1643$ kJ/kg

Energy eq. compressor: $w_C = h_2 - h_1 = 186.7$ kJ/kg

Energy condenser: $q_H = h_2 - h_3 = 1170.2$ kJ/kg

To heat 0.1 kg/s of water from 15^oC to 60^oC,

$$\dot{Q}_{H2O} = \dot{m}(\Delta h) = 0.1(251.11 - 62.98) = 18.81 \text{ kW}$$

Using the heat pump

$$\dot{W}_{IN} = \dot{Q}_{H2O}(w_C/q_H) = 18.81(186.7 / 1170.2) = 3.0 \text{ kW}$$

a saving of **15.8 kW**

11.92

The refrigerant R-134a is used as the working fluid in a conventional heat pump cycle. Saturated vapor enters the compressor of this unit at 10°C; its exit temperature from the compressor is measured and found to be 85°C. If the compressor exit is at 2 MPa what is the compressor isentropic efficiency and the cycle COP?

Solution:

R-134a heat pump:

Table B.4

State 1: $T_{EVAP} = 10^oC$, x = 1

$h_1 = 404.2$ kJ/kg, $s_1 = 1.7218$ kJ/kg K

State 2: T_2, P_2: $h_2 = 452.2$ kJ/kg

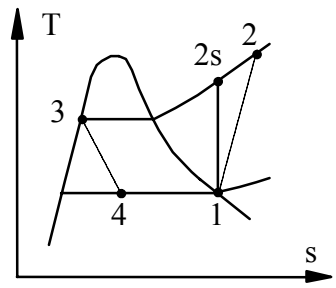

C.V. Compressor

Energy Eq.: $w_{C\,ac} = h_2 - h_1 = 452.2 - 404.2 = \mathbf{48.0\ kJ/kg}$

State 2s: 2 MPa , $s_{2S} = s_1 = 1.7218$ kJ/kg $T_{2S} = 73.2^oC$, $h_{2S} = 436.6$ kJ/kg

Efficiency: $$\eta = \frac{w_{C\,s}}{w_{C\,ac}} = \frac{h_{2S} - h_1}{h_2 - h_1} = \frac{436.6 - 404.2}{452.2 - 404.2} = \mathbf{0.675}$$

C.V. Condenser $T_3 = 67.5°C$, $h_3 = 300$ kJ/kg

Energy Eq.: $q_H = h_2 - h_3 = 452.2 - 300 = 152.2$ kJ/kg

COP Heat pump: $$\beta = \frac{q_H}{w_{C\,ac}} = \frac{152.2}{48.0} = \mathbf{3.17}$$

11.93

A refrigerator in a laboratory uses R-134a as the working substance. The high pressure is 1200 kPa, the low pressure is 101.3 kPa, and the compressor is reversible. It should remove 500 W from a specimen currently at –20°C (not equal to T_L in the cycle) that is inside the refrigerated space. Find the cycle COP and the electrical power required.

Solution:

State 1: 101.3 kPa, x = 1, Table B.5.1: h_1 = 382.16 kJ/kg, s_1 = 1.7453 kJ/kg K

State 3: 1200 kPa, 46.31°C, x = 0, Table B.5.1: h_3 = 266.13 kJ/kg

C.V. Compressor

Energy Eq.: $w_C = h_2 - h_1$

Entropy Eq.: $s_2 = s_1 + s_{gen} = s_1$

State 2: 1.2 MPa , $s_2 = s_1$ = 1.7453 kJ/kg, $T_2 \approx 56^oC$, h_2 = 433.92 kJ/kg

$w_C = h_2 - h_1$ = 433.92 – 382.16 = 51.76 kJ/kg

Energy Eq. evaporator: $q_L = h_1 - h_4 = h_1 - h_3$ = 382.16 – 266.13 = 116.03 kJ/kg

COP Refrigerator: $\beta = \dfrac{q_L}{w_C} = \dfrac{116.03}{51.76}$ = **2.24**

Power: $\dot{W}_{IN} = \dot{Q}_L / \beta$ = 500 W/ 2.24 = **223 W**

11.94

Consider the previous problem and find the two rates of entropy generation in the process and where they occur.

Solution:

From the basic cycle we know that entropy is generated in the valve as the throttle process is irreversible.

State 1: 101.3 kPa, x = 1, Table B.5.1: $h_1 = 382.16$ kJ/kg, $s_1 = 1.7453$ kJ/kg K

State 3: 1200 kPa, x = 0, Table B.5.1: $h_3 = 266.13$ kJ/kg, $s_3 = 1.2204$ kJ/kg K

Energy Eq. evaporator: $q_L = h_1 - h_4 = h_1 - h_3 = 382.16 - 266.13 = 116.0$ kJ/kg

Mass flow rate: $\dot{m} = \dot{Q}_L / q_L = 0.5 / 116.0 = 0.00431$ kg/s

C.V. Valve

Energy Eq.: $h_4 = h_3 = 266.13$ kJ/kg => $x_4 = (h_4 - h_f)/h_{fg}$

$$x_4 = \frac{266.13 - 165.8}{216.36} = 0.4637$$

$$s_4 = s_f + x_4\, s_{fg} = 0.869 + x_4 \times 0.8763 = 1.2754 \text{ kJ/kg K}$$

Entropy Eq.: $s_{gen} = s_4 - s_3 = 1.2754 - 1.2204 = 0.055$ kJ/kg K

$$\dot{S}_{gen\ valve} = \dot{m} s_{gen} = 0.00431 \times 0.055 \times 1000 = \mathbf{0.237\ W/K}$$

There is also entropy generation in the heat transfer process from the specimen at –20°C to the refrigerant $T_1 = -26.3°C = T_{sat}$ (101.3 kPa).

$$\dot{S}_{gen\ inside} = \dot{Q}_L \left[\frac{1}{T_{specimen}} - \frac{1}{T_L} \right] = 500 \left(\frac{1}{246.9} - \frac{1}{253.2}\right) = \mathbf{0.0504\ W/K}$$

11.95

In an actual refrigeration cycle using R-134a as the working fluid, the refrigerant flow rate is 0.05 kg/s. Vapor enters the compressor at 150 kPa, –10°C, and leaves at 1.2 MPa, 75°C. The power input to the non-adiabatic compressor is measured and found be 2.4 kW. The refrigerant enters the expansion valve at 1.15 MPa, 40°C, and leaves the evaporator at 160 kPa, –15°C. Determine the entropy generation in the compression process, the refrigeration capacity and the coefficient of performance for this cycle.

Solution:

Actual refrigeration cycle

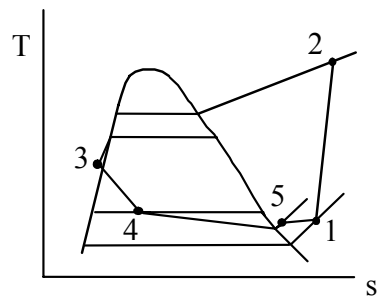

1: compressor inlet $T_1 = -10^oC$, $P_1 = 150$ kPa

2: compressor exit $T_2 = 75^oC$, $P_2 = 1.2$ MPa

3: Expansion valve inlet $T_3 = 40^oC$
$P_3 = 1.15$ MPa

5: evaporator exit $T_5 = -15^oC$, $P_5 = 160$ kPa

Table B.5 (CATT3) $h_1 = 394.2$ kJ/kg, $s_1 = 1.739$ kJ/kg-K,
$h_2 = 454.2$ kJ/kg, $s_2 = 1.805$ kJ/kg-K

CV Compressor: $h_1 + q_{COMP} + w_{COMP} = h_2$; $s_1 + \int dq/T + s_{gen} = s_2$

$$w_{COMP} = \dot{W}_{COMP}/\dot{m} = 2.4/0.05 = 48.0 \text{ kJ/kg}$$

$$q_{COMP} = h_2 - w_{COMP} - h_1 = 454.2 - 48.0 - 394.2 = 12 \text{ kJ/kg}$$

$$s_{gen} = s_2 - s_1 - q / T_o = 1.805 - 1.739 - 12/298.15 = \mathbf{0.0258\ kJ/kg\text{-}K}$$

C.V. Evaporator

$$q_L = h_5 - h_4 = 389.8 - 256.4 = 133.4 \text{ kJ/kg}$$

$$\Rightarrow \dot{Q}_L = \dot{m}q_L = 0.05 \times 133.4 = \mathbf{6.67\ kW}$$

COP: $$\beta = \frac{q_L}{w_{COMP}} = \frac{133.4}{48.0} = \mathbf{2.78}$$

Extended refrigeration cycles

11.96

One means of improving the performance of a refrigeration system that operates over a wide temperature range is to use a two-stage compressor. Consider an ideal refrigeration system of this type that uses R-410a as the working fluid, as shown in Fig. 11.23. Saturated liquid leaves the condenser at 40°C and is throttled to –20°C. The liquid and vapor at this temperature are separated, and the liquid is throttled to the evaporator temperature, –50°C. Vapor leaving the evaporator is compressed to the saturation pressure corresponding to –20°C, after which it is mixed with the vapor leaving the flash chamber. It may be assumed that both the flash chamber and the mixing chamber are well insulated to prevent heat transfer from the ambient. Vapor leaving the mixing chamber is compressed in the second stage of the compressor to the saturation pressure corresponding to the condenser temperature, 40°C. Determine

a. The coefficient of performance of the system.

b. The coefficient of performance of a simple ideal refrigeration cycle operating over the same condenser and evaporator ranges as those of the two-stage compressor unit studied in this problem.

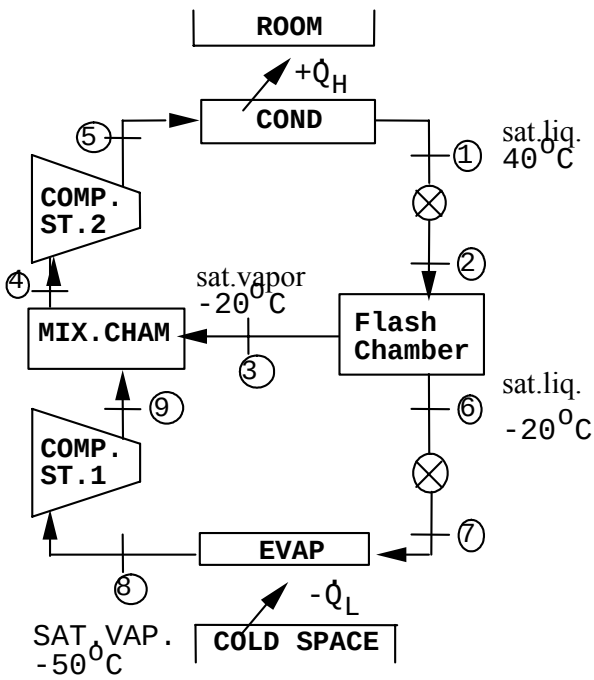

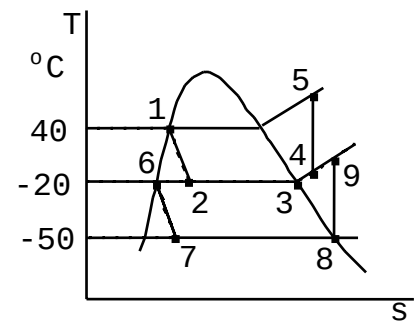

R-410a refrigerator with 2-stage compression

CV: expansion valve, upper loop

$h_2 = h_1 = 124.09 = 28.24 + x_2 \times 243.65; \quad x_2 = 0.3934$

$m_3 = x_2 m_2 = x_2 m_1 = 0.3934$ kg (for m_1=1 kg)

$m_6 = m_1 - m_3 = 0.6066$ kg

CV: expansion valve, lower loop

$h_7 = h_6 = 28.24 = -13.8 + x_7 \times 271.6, \quad x_7 = 0.15478$

$Q_L = m_6 (h_8 - h_7) = 0.6066 (257.80 – 28.24) = 139.25$ kJ

$q_L = Q_L / m_1 = 139.25$ kJ/kg-m_1

CV: 1st stage compressor

$s_8 = s_9 = 1.1568$ kJ/kg-K, $P_9 = P_{SAT\ -20\ ^oC} = 0.3996$ MPa

$\Rightarrow T_9 = 2.7\ ^oC, \quad h_9 = 292.82$ kJ/kg

CV: mixing chamber (assume constant pressure mixing)

Energy Eq.: $m_6h_9 + m_3h_3 = m_1h_4$

or $h_4 = 0.6066 \times 292.82 + 0.3934 \times 271.89 = 284.6$ kJ/kg

$h_4, P_4 \approx 400$ kPa $\Rightarrow T_4 = -6.3\ ^oC, \ s_4 = 1.1261$ kJ/kg K

CV: 2nd stage compressor $P_4 = 400$ kPa $= P_9 = P_3$

$P_5 = P_{sat\ 40^oC} = 2.4207$ MPa, $s_5 = s_4 \Rightarrow T_5 = 81.3^oC, h_5 = 339.42$ kJ/kg

CV: condenser

Energy Eq.: $q_H = h_5 - h_1 = 339.42 - 124.09 = 215.33$ kJ/kg

$\beta_{2\ stage} = q_L/(q_H - q_L) = 139.25/(215.33 – 139.25) =$ **1.83**

b) 1 stage compression

$h_3 = h_4 = 124.09$ kJ/kg

$h_1 = 257.80$ kJ/kg

$q_L = h_1 - h_4 = 133.7$ kJ/kg

$\left.\begin{array}{l} s_1 = s_2 = 1.1568 \\ P_2 = 2.4207 \text{ MPa} \end{array}\right\}$

$\Rightarrow T_2 = 90.7\ ^oC, h_2 = 350.35$

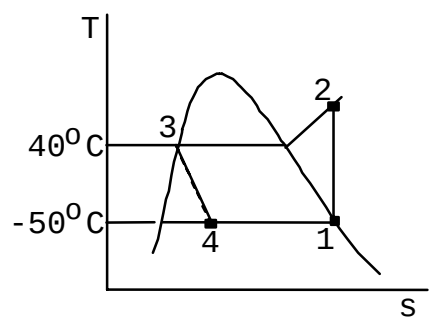

$q_H = h_2 - h_3 = 350.35 - 124.09 = 226.26$ kJ/kg

$\beta_{1\ stage} = q_L/(q_H - q_L) = 133.7/(226.26 - 133.7) =$ **1.44**

11.97

A cascade system with one refrigeration cycle operating with R-410a has an evaporator at -40°C and a high pressure of 1400 kPa. The high temperature cycle uses R-134a with an evaporator at 0°C and a high pressure of 1600 kPa. Find the ratio of the two cycles mass flow rates and the overall COP.

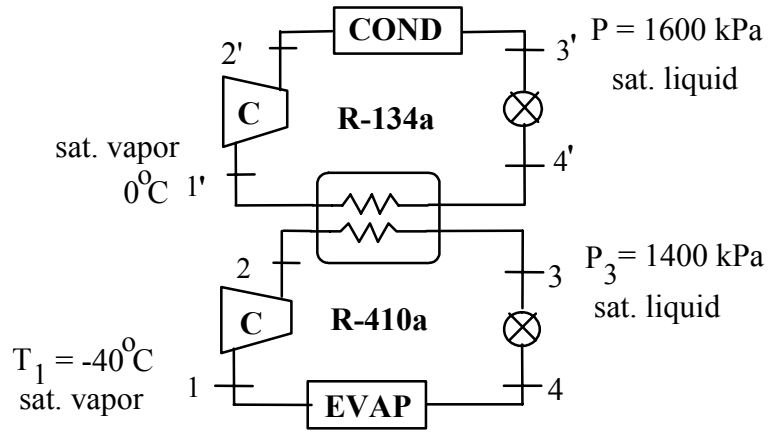

R-134a cycle **R-410a cycle**

	T,°C	P	h	s		T,°C	P	h	s
1′	0	293	398.6	1.727	1	-40	175	262.8	1.127
2′	63.9	1600	433.9	1.727	2	52.7	1400	322.4	1.127
3′	57.9	1600	284.4		3	18.9	1400	87.4	
4′	0		284.4		4	-40	175	87.4	

$$\dot{m}/\dot{m}' = \frac{h_1' - h_4'}{h_2 - h_3} = \frac{398.6 - 284.1}{322.4 - 87.4} = \mathbf{0.4872}$$

$$q_L = h_1 - h_4 = 262.8 - 87.4 = 175.4 \text{ kJ/kg}$$

$$-\dot{W}_{TOT}/\dot{m} = (h_2 - h_1) + (\dot{m}'/\dot{m})(h_2' - h_1')$$

$$= 322.4 - 262.8 + \frac{1}{0.4872}(433.9 - 398.6) = 132.1 \frac{\text{kJ}}{\text{kg}}$$

$$\beta = \dot{Q}_L/(-\dot{W}_{TOT}) = 175.4/132.1 = \mathbf{1.328}$$

11.98

A cascade system is composed of two ideal refrigeration cycles, as shown in Fig. 11.25. The high-temperature cycle uses R-410a. Saturated liquid leaves the condenser at 40°C, and saturated vapor leaves the heat exchanger at –20°C. The low-temperature cycle uses a different refrigerant, R-23. Saturated vapor leaves the evaporator at –80°C, h = 330 kJ/kg, and saturated liquid leaves the heat exchanger at –10°C, h = 185 kJ/kg. R-23 out of the compressor has h = 405 kJ/kg. Calculate the ratio of the mass flow rates through the two cycles and the coefficient of performance of the system.

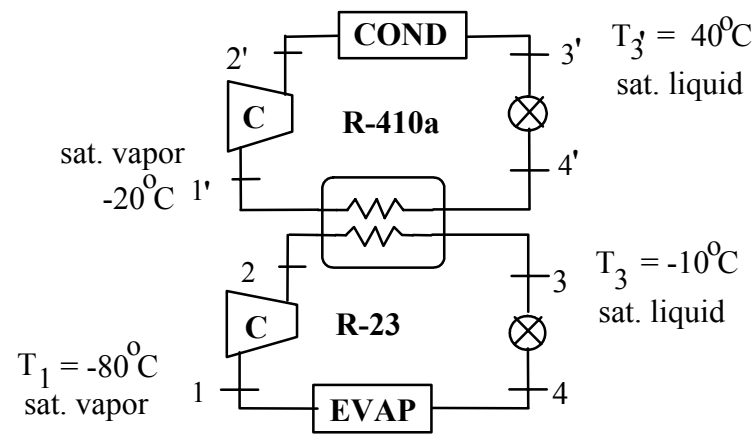

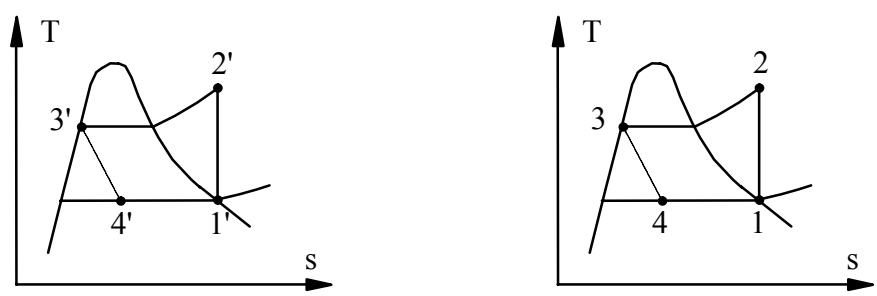

	T,°C	P	h	s		T,°C	P	h	s
1′	-20	0.400	271.89	1.0779	1	-80	0.12	330	1.76
2′	71	2.421	322.61	1.0779	2	50	1.90	405	1.76
3′	40	2.421	124.09		3	-10	1.90	185	
4′	-20		124.09		4	-80	0.12	185	

$$\dot{m}/\dot{m}' = \frac{h_1' - h_4'}{h_2 - h_3} = \frac{271.89 - 124.09}{405 - 185} = \mathbf{0.6718}$$

$$q_L = h_1 - h_4 = 330 - 185 = 145 \text{ kJ/kg}$$

$$-\dot{W}_{TOT}/\dot{m} = (h_2 - h_1) + (\dot{m}'/\dot{m})(h_2' - h_1') = (405\text{-}330) + \frac{1}{0.6718}(322.61\text{–}271.89) = 150.5 \frac{\text{kJ}}{\text{kg}}$$

$$\beta = \dot{Q}_L/(-\dot{W}_{TOT}) = 145/150.5 = \mathbf{0.96}$$

11.99

A split evaporator is used to provide cooling of the refrigerator section and separate cooling of the freezer section as shown in Fig. P11.99. Assume constant pressure in the two evaporators. How does the COP = $(Q_{L1} + Q_{L2})/W$ compare to a refrigerator with a single evaporator at the lowest temperature?

Throttle processes: $h_4 = h_3$; $h_5 = h_6$

Refrigerator: $q_{L\,R} = h_5 - h_4$

freezer: $q_{L\,F} = h_1 - h_6$

Add the two heat transfers: $q_{L\,R} + q_{L\,F} = h_5 - h_4 + h_1 - h_6 = h_1 - h_4$

which is the **same** as for the standard cycle expanding to the lowest pressure.

$$COP_{split} = COP_{std} = (h_1 - h_4) / (h_2 - h_1)$$

11.100

A refrigerator using R-410a is powered by a small natural gas fired heat engine with a thermal efficiency of 25%, as shown in Fig. P11.100. The R-410a condenses at 40°C and it evaporates at –20°C and the cycle is standard. Find the two specific heat transfers in the refrigeration cycle. What is the overall coefficient of performance as Q_L/Q_1?

Solution:

Evaporator: Inlet State is saturated liq-vap with $h_4 = h_3 = 124.09$ kJ/kg

The exit state is saturated vapor with $h_1 = 271.89$ kJ/kg

$q_L = h_1 - h_4 = h_1 - h_3 =$ **147.8 kJ/kg**

Compressor: Inlet State 1 and Exit State 2 about 2.42 MPa

$w_C = h_2 - h_1$; $s_2 = s_1 = 1.0779$ kJ/kgK

2: $T_2 \approx 70°C$ $h_2 = 322.6$ kJ/kg

$w_C = h_2 - h_1 = 50.71$ kJ/kg

Condenser: Brings it to saturated liquid at state 3

$q_H = h_2 - h_3 = 322.6 - 124.09 =$ **198.5 kJ/kg**

Overall Refrigerator:

$$\beta = q_L / w_C = 147.8 / 50.71 = 2.915$$

Heat Engine:

$$\dot{W}_{HE} = \eta_{HE}\dot{Q}_1 = \dot{W}_C = \dot{Q}_L / \beta$$

$$\dot{Q}_L / \dot{Q}_1 = \eta\beta = 0.25 \times 2.915 = \mathbf{0.729}$$

Ideal refrigeration cycle
$T_{cond} = 40^oC = T_3$
$T_{evap} = -20^oC = T_1$
Properties from Table B.4

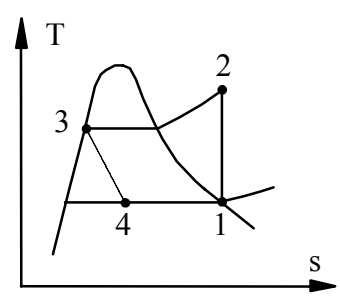

Ammonia absorption cycles

11.101

Notice the configuration in Fig.11.26 has the left hand side column of devices substitute for a compressor in the standard cycle. What is an expression for the equivalent work output from the left hand side devices, assuming they are reversible and the high and low temperatures are constant, as a function of the pump work W and the two temperatures.

The left hand side devices works like a combination of a heat engine with some additional shaft work input. We can analyze this with a control volume around all the devices that substitute for the compressor in the standard cycle.

C.V. Pump, absorber, heat exchanger and generator.
This C.V. has an inlet flow at state 1 and exit flow at state 2 with numbers as in the standard cycle.

Energy Eq.: $0 = h_1 + w + q'_H - q'_L - h_2$ all per mass flow at 1 and 2.

Entropy Eq.: $0 = s_1 + \frac{q'_H}{T_{H'}} - \frac{q'_L}{T_{L'}} - s_2 + 0$

Now solve for q'_L from the entropy equation and substitute into the energy equation

$$q'_L = T_{L'}\,(s_1 - s_2) + (T_{L'} / T_{H'})\, q'_H$$

$$w + [1 - \frac{T_{L'}}{T_{H'}}]\, q'_H = (h_2 - h_1) - T_{L'}\,(s_2 - s_1)$$

The high T heat transfer acts as if it was delivered to a Carnot heat engine and the Carnot heat engine work output was added to the shaft work w. That sum gives the increase in exergy from state 1 to state 2. Notice in the standard cycle, $s_2 = s_1$, and the last term is zero.

11.102

As explained in the previous Problem the ammonia absorption cycle is very similar to the set-up sketched in Problem 11.100. Assume the heat engine has an efficiency of 30% and the COP of the refrigeration cycle is 3.0 what is then the ratio of the cooling to the heating heat transfer Q_L/Q_1?

Heat Engine: $W = \eta Q_1 = 0.3\ Q_1$

Refrigerator.: $\beta = Q_L / W \quad \Rightarrow \quad Q_L = \beta\ W = \beta\ \eta Q_1$

So now

$$Q_L/Q_1 = \beta\ \eta = 3 \times 0.3 = \mathbf{0.9}$$

11.103

Consider a small ammonia absorption refrigeration cycle that is powered by solar energy and is to be used as an air conditioner. Saturated vapor ammonia leaves the generator at 50°C, and saturated vapor leaves the evaporator at 10°C. If 7000 kJ of heat is required in the generator (solar collector) per kilogram of ammonia vapor generated, determine the overall performance of this system.

Solution;

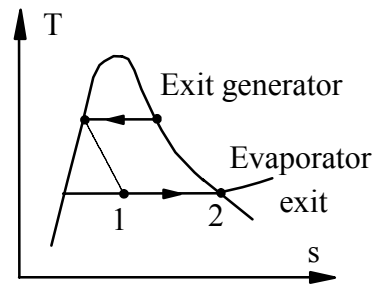

NH_3 absorption cycle:

sat. vapor at 50°C exits the generator

sat. vapor at 10°C exits the evaporator

$q_H = q_{GEN} = 7000$ kJ/kg NH_3 out of gen.

C.V. Evaporator

$$q_L = h_2 - h_1 = h_{g\ 10^oC} - h_{f\ 50^oC} = 1452.2 - 421.6 = 1030.6 \text{ kJ/kg}$$

COP $\Rightarrow$ $q_L/q_H = 1030.6/7000 =$ **0.147**

11.104

The performance of an ammonia absorption cycle refrigerator is to be compared with that of a similar vapor-compression system. Consider an absorption system having an evaporator temperature of –10°C and a condenser temperature of 50°C. The generator temperature in this system is 150°C. In this cycle 0.42 kJ is transferred to the ammonia in the evaporator for each kilojoule transferred from the high-temperature source to the ammonia solution in the generator. To make the comparison, assume that a reservoir is available at 150°C, and that heat is transferred from this reservoir to a reversible engine that rejects heat to the surroundings at 25°C. This work is then used to drive an ideal vapor-compression system with ammonia as the refrigerant. Compare the amount of refrigeration that can be achieved per kilojoule from the high-temperature source with the 0.42 kJ that can be achieved in the absorption system.

Solution:

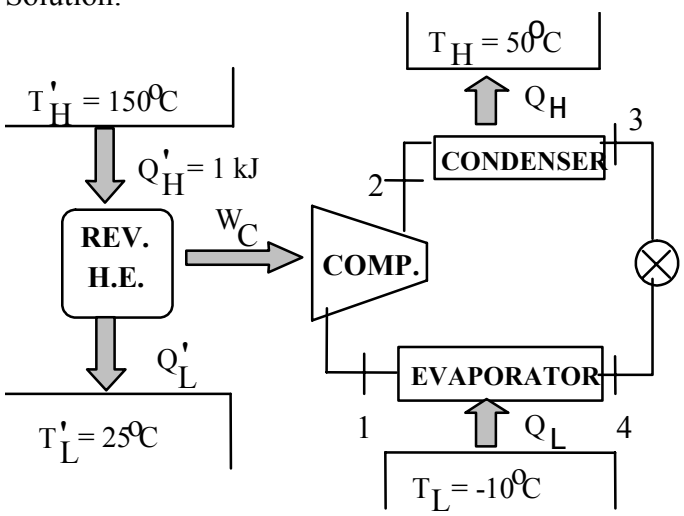

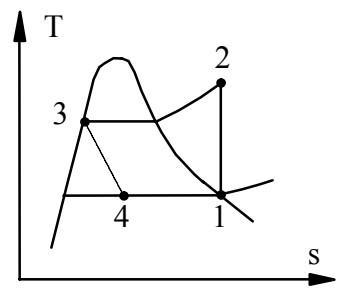

$T_1 = -10\ ^oC$
$h_1 = 1430.8$ kJ/kg,
$s_1 = 5.4673$ kJ/kg-K
$h_4 = h_3 = 421.48$ kJ/kg

For the rev. heat engine: $\eta_{TH} = 1 - T'_L/T'_H = 1 - \dfrac{298.2}{423.2} = 0.295$

$$\Rightarrow \qquad W_C = \eta_{TH}\, Q'_H = 0.295 \text{ kJ}$$

For the NH_3 refrig. cycle: $P_2 = P_3 = 2033$ kPa , Use 2000 kPa Table

$s_2 = s_1 = 5.4673$ kJ/kg-K => $T_2 \approx 135°C$, $h_2 \approx 1724$ kJ/kg

$w_C = h_2 - h_1 = 1724 - 1430.8 = 293.2$ kJ/kg

$q_L = h_1 - h_4 = 1430.8 - 421.48 = 1009.3$ kJ/kg

$\beta = q_L/w_C = 1009.3 / 293.2 = 3.44$

$\Rightarrow Q_L = \beta w_C = 3.44 \times 0.295 =$ **1.015 kJ**

This is based on the assumption of an ideal heat engine & refrigeration cycle.

Availabilty or Exergy Concepts

11.105

Find the availability of the water at all four states in the Rankine cycle described in Problem 11.30. Assume that the high-temperature source is 500°C and the low-temperature reservoir is at 25°C. Determine the flow of availability in or out of the reservoirs per kilogram of steam flowing in the cycle. What is the overall cycle second law efficiency?

Solution:

Reference State: 100 kPa, 25°C, s_o = 0.3673 kJ/kg K, h_o = 104.87 kJ/kg

$$\psi_1 = h_1 - h_o - T_o(s_1 - s_o)$$

$$= 191.81 - 104.87 - 298.15(0.6492 - 0.3673) = 2.89 \text{ kJ/kg}$$

$$\psi_2 = 194.83 - 104.87 - 298.15(0.6492 - 0.3673) = \psi_1 + 3.02 = 5.91 \text{ kJ/kg}$$

$$\psi_3 = 3230.82 - 104.87 - 298.15(6.9211 - 0.3673) = 1171.93 \text{ kJ/kg}$$

$$\psi_4 = \psi_3 - w_{T,s} = 1171.93 - 1038.3 = 133.6 \text{ kJ/kg}$$

$$\Delta\psi_H = (1 - T_o/T_H)q_H = 0.6144 \times 3036 = 1865.3 \text{ kJ/kg}$$

$$\Delta\psi_L = (1 - T_o/T_o)q_C = 0 \text{ kJ/kg}$$

$$\eta_{II} = w_{NET}/\Delta\psi_H = (1038.3 - 3.02)/1865.3 = \mathbf{0.5657}$$

Notice— $T_H > T_3$, $T_L < T_4 = T_1$ so cycle is externally irreversible. Both q_H and q_C are over finite ΔT.

Energy Transfers (kJ/kg):

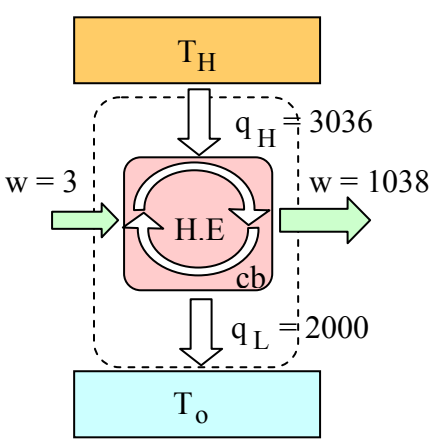

Exergy Transfers (kJ/kg):

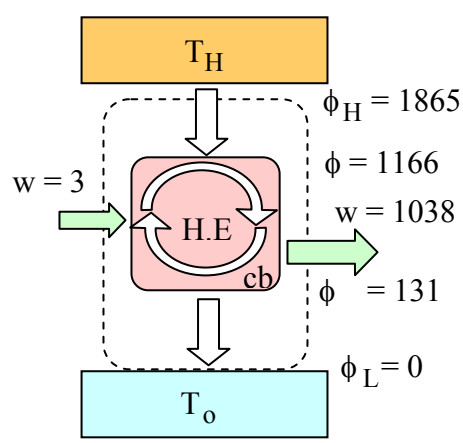

11.106

If we neglect the external irreversibilities due to the heat transfers over finite temperature differences in a power plant how would you define its second law efficiency?

The first law efficiency is a conversion efficiency as

$$\eta_I = \frac{w_{net}}{q_H} = \frac{w_{net}}{h_3 - h_2}$$

The second law efficiency is the same ratio but expressed in availability (exergy)

$$\eta_{II} = \frac{\text{output}}{\text{source}} = \frac{w_{net}}{\varphi_H} = \frac{w_{net}}{\varphi_3 - \varphi_2} \quad \text{or} \quad = \frac{w_{net}}{\varphi_H - \varphi_L}$$

The last expression must be used if the heat rejection at the low T is assigned any exergy value (normally not).

11.107

Find the flows and fluxes of exergy in the condenser of Problem 11.29. Use those to determine the second law efficiency.

For this case we select T_o = 12°C = 285 K, the ocean water temperature.

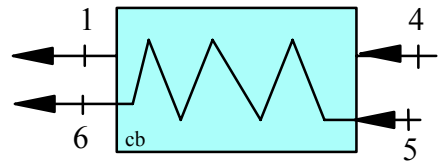

The states properties from Tables B.1.1 and B.1.3

1: 45°C, x = 0: h_1 = 188.42 kJ/kg,

3: 3.0 MPa, 600°C: s_3 = 7.5084 kJ/kg K

C.V. Turbine : $w_T = h_3 - h_4$; $s_4 = s_3$

$$s_4 = s_3 = 7.5084 = 0.6386 + x_4\,(7.5261) \quad \Rightarrow \quad x_4 = 0.9128$$

$$\Rightarrow \; h_4 = 188.42 + 0.9128\,(2394.77) = 2374.4 \text{ kJ/kg}$$

C.V. Condenser : $q_L = h_4 - h_1 = 2374.4 - 188.42 = 2186$ kJ/kg

$$\dot{Q}_L = \dot{m} q_L = 25 \times 2186 = 54.65 \text{ MW} = \dot{m}_{ocean}\, C_p\, \Delta T$$

$$\dot{m}_{ocean} = \dot{Q}_L / C_p\, \Delta T = 54\,650 / (4.18 \times 3) = 4358 \text{ kg/s}$$

The net drop in exergy of the water is

$$\dot{\Phi}_{water} = \dot{m}_{water}\,[h_4 - h_1 - T_o(s_4 - s_1)]$$

$$= 25\,[\,2374.4 - 188.4 - 285\,(7.5084 - 0.6386)]$$

$$= 54\,650 - 48\,947 = \mathbf{5703\ kW}$$

The net gain in exergy of the ocean water is

$$\dot{\Phi}_{ocean} = \dot{m}_{ocean}[h_6 - h_5 - T_o(s_6 - s_5)]$$

$$= \dot{m}_{ocean}[C_p(T_6 - T_5) - T_o C_p \ln(\frac{T_6}{T_5})\,]$$

$$= 4358\,[\,4.18(15 - 12) - 285 \times 4.18 \ln \frac{273 + 15}{273 + 12}\,]$$

$$= 54\,650 - 54\,364 = \mathbf{286\ kW}$$

The second law efficiency is

$$\eta_{II} = \dot{\Phi}_{ocean} / \dot{\Phi}_{water} = \frac{286}{5703} = \mathbf{0.05}$$

In reality all the exergy in the ocean water is destroyed as the 15°C water mixes with the ocean water at 12°C after it flows back out into the ocean and the efficiency does not have any significance. Notice the small rate of exergy relative to the large rates of energy being transferred.

11.108

Find the flows of exergy into and out of the feedwater heater in Problem 11.42.

State 1: $x_1 = 0$, $h_1 = 298.25$ kJ/kg, $v_1 = 0.001658$ m^3/kg

State 3: $x_3 = 0$, $h_3 = 421.48$ kJ/kg, $v_3 = 0.001777$ m^3/kg

State 5: $h_5 = 421.48$ kJ/kg, $s_5 = 4.7306$ kJ/kg K

State 6: $s_6 = s_5$ => $x_6 = (s_6 - s_f)/s_{fg} = 0.99052$, $h_6 = 1461.53$ kJ/kg

C.V Pump P1

$$w_{P1} = h_2 - h_1 = v_1(P_2 - P_1) = 0.001658(2033 - 1003) = 1.708 \text{ kJ/kg}$$

$$\Rightarrow h_2 = h_1 + w_{P1} = 298.25 + 1.708 = 299.96 \text{ kJ/kg}$$

C.V. Feedwater heater: Call $\dot{m}_6 / \dot{m}_{tot} = y$ (the extraction fraction)

Energy Eq.: $(1 - y)\, h_2 + y\, h_6 = 1\, h_3$

$$y = \frac{h_3 - h_2}{h_6 - h_2} = \frac{762.79 - 189.42}{3640.6 - 189.42} = 0.1046$$

$$\dot{m}_{extr} = y\, \dot{m}_{tot} = 0.1046 \times 5 = 0.523 \text{ kg/s}$$

$$\dot{m}_2 = (1-y)\, \dot{m}_{tot} = (1 - 0.1046)\, 5 = 4.477 \text{ kg/s}$$

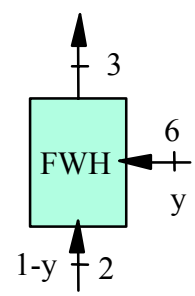

Reference State: 100 kPa, 20°C, $s_o = 6.2826$ kJ/kg K, $h_o = 1516.1$ kJ/kg

$$\psi_2 = h_2 - h_o - T_o(s_2 - s_o)$$

$$= 299.96 - 1516.1 - 293.15(1.121 - 6.2826) = 296.21 \text{ kJ/kg}$$

$$\psi_6 = 1461.53 - 1516.1 - 293.15(4.7306 - 6.2826) = 400.17 \text{ kJ/kg}$$

$$\psi_3 = 421.48 - 1516.1 - 293.15(1.5121 - 6.2826) = 303.14 \text{ kJ/kg}$$

The rate of exergy flow is then

$$\dot{\Phi}_2 = \dot{m}_2\psi_2 = 4.477 \times 296.21 = \mathbf{1326\ kW}$$

$$\dot{\Phi}_6 = \dot{m}_6\psi_6 = 0.523 \times 400.17 = \mathbf{209.3\ kW}$$

$$\dot{\Phi}_3 = \dot{m}_3\psi_3 = 5.0 \times 303.14 = \mathbf{1516\ kW}$$

The mixing is destroying 1326 + 209 – 1516 = 19 kW of exergy

11.109

The power plant using ammonia in Problem 11.62 has a flow of liquid water at 120°C, 300 kPa as a heat source, the water leaves the heat exchanger at 90°C. Find the second law efficiency of this heat exchanger.

C.V. The liquid water source - ammonia boiler heat exchanger.

$\Delta h_{liq} = 503.69 - 376.9 = 126.79$ kJ/kg (sat. liquid at 120°C and 90°C)

$\Delta s_{liq} = 1.5275 - 1.1924 = 0.3351$ kJ/kgK

The energy equation establishes the ratio of the mass flow rates

$$\dot{Q}_H = \dot{m}_{water}\, \Delta h_{liq} = \dot{m}_{NH3}\, q_H$$

$$\Rightarrow \quad \dot{m}_{water} / \dot{m}_{NH3} = q_H / \Delta h_{liq} = 1442/126.79 = 11.373$$

Now the second law efficiency is the ratio of exergy pick-up over exergy source

$$\eta_{II} = \frac{\dot{m}_{NH3}\, \Delta\psi}{\dot{m}_{water}\, \Delta\psi} = \frac{\dot{m}_{NH3}\, [q_H - T_o(s_5 - s_3)]}{\dot{m}_{water}\, (\Delta h_{liq} - T_o \Delta s_{liq})}$$

From the power plant cycle we have state 3:

State 3: $x_3 = 0$, $h_3 = 171.65$ kJ/kg, $s_3 = 0.6793$ kJ/kgK, $v_3 = 0.00156$ m^3/kg

State 5: $h_5 = 1614.6$ kJ/kg, $s_5 = 5.4971$ kJ/kg K

C.V Pump P2: $w_{P2} = h_4 - h_3 = v_3(P_4 - P_3) = 0.00156(1000 - 400) = 0.936$ kJ/kg

$$q_H = h_5 - h_4 = 1614.6 - (171.65 + 0.936) = 1442 \text{ kJ/kg}$$

$$s_5 - s_3 = 5.4971 - 0.6793 = 4.81775 \text{ kJ/kgK}$$

$$\eta_{II} = \frac{1}{11.373}\, \frac{1442 - 253.15 \times 4.81775}{126.79 - 253.15 \times 0.3351} = \mathbf{0.466}$$

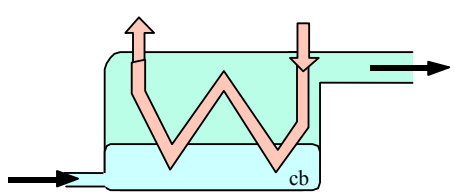

11.110

For problem 11.52 consider the boiler/super-heater. Find the exergy destruction in this setup and the second law efficiency for the boiler-source set-up.

A Rankine cycle feeds 5 kg/s ammonia at 2 MPa, 140°C to the turbine, which has an extraction point at 800 kPa. The condenser is at -20°C and a closed feed water heater has an exit state (3) at the temperature of the condensing extraction flow and it has a drip pump. The source for the boiler is at constant 180°C. Find the extraction flow rate and state 4 into the boiler.

The boiler has flow in at state 4 and out at state 5 with the source providing a q at 180°C.

Assume state 4 is saturated liquid at T_4 so $h_4 = h_{f\,4}$ => $T_4 = 17.92^oC$

State 4: $h_4 = 264.4$ kJ/kg $= h_{f\,4}$, $s_4 = s_{f\,4} = 1.00705$ kJ/kgK

State 5: $h_5 = 1738.2$ kJ/kg, $s_5 = 5.5022$ kJ/kg K

Energy Eq. $q_H = h_5 - h_4 = 1738.2 - 264.4 = 1473.8$ kJ/kg

Entropy Eq. $s_4 + q_H/T_H + s_{gen} = s_5$ => $s_{gen} = s_5 - s_4 - q_H/T_H$

$$\dot{S}_{gen} = \dot{m}s_{gen} = 5\,[5.5022 - 1.00705 - \frac{1473.8}{180 + 273.15}]$$

$$= 5 \times 1.2428 = \mathbf{6.21\ kW/K}$$

The flow increase in exergy is:

$$\psi_5 - \psi_4 = h_5 - h_4 - T_o\,(s_5 - s_4) = 1473.8 - 298.15\,(5.5022 - 1.00705)$$

$$= 133.57 \text{ kJ/kg}$$

The exergy provided by the source is:

$$\phi_H = (1 - T_o/T_H)\,q_H = (1 - \frac{298.15}{180 + 273.15})\,1473.8 = 504.1 \text{ kJ/kg}$$

Second law efficiency is

$$\eta_{II} = \frac{\text{gain in exergy}}{\text{source exergy input}} = \frac{133.57}{504.1} = \mathbf{0.265}$$

$$(= 1 - T_o s_{gen}/\phi_H = 1 - 298.15 \times 1.2428 / 504.1\ )$$

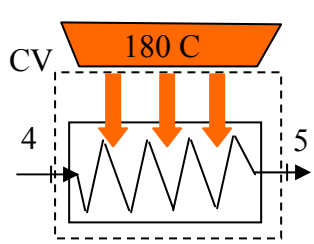

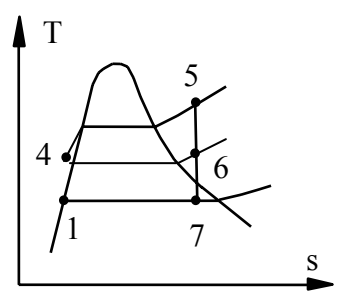

11.111

Steam is supplied in a line at 3 MPa, 700°C. A turbine with an isentropic efficiency of 85% is connected to the line by a valve and it exhausts to the atmosphere at 100 kPa. If the steam is throttled down to 2 MPa before entering the turbine find the actual turbine specific work. Find the change in availability through the valve and the second law efficiency of the turbine.

Take C.V. as valve and a C.V. as the turbine.

Valve: $h_2 = h_1 = 3911.7$ kJ/kg, $s_2 > s_1 = 7.7571$ kJ/kg K,

$h_2, P_2 \Rightarrow s_2 = 7.9425$ kJ/kg K

$\psi_1 - \psi_2 = h_1 - h_2 - T_0(s_1 - s_2) = 0 - 298.15(7.7571 - 7.9425) =$ **55.3 kJ/kg**

So some potential work is lost in the throttling process.

Ideal turbine: $s_3 = s_2 \Rightarrow h_{3s} = 2929.13$ kJ/kg $\quad w_{T,s} = 982.57$ kJ/kg

$w_{T,ac} = h_2 - h_{3ac} = \eta w_{T,s} =$ **835.2 kJ/kg**

$h_{3ac} = 3911.7 - 835.2 = 3076.5 \Rightarrow s_{3ac} = 8.219$ kJ/kg K

$w^{rev} = \psi_2 - \psi_{3ac} = h_2 - h_{3ac} - T_0(s_2 - s_{3ac}) = 835.2 - 298.15(7.9425 - 8.219)$

$= 917.63$ kJ/kg $\Rightarrow$

$\eta_{II} = w_{T,ac} / w^{rev} = 835.2/917.63 =$ **0.91**

11.112

A flow of steam at 10 MPa, 550°C goes through a two-stage turbine. The pressure between the stages is 2 MPa and the second stage has an exit at 50 kPa. Assume both stages have an isentropic efficiency of 85%. Find the second law efficiencies for both stages of the turbine.

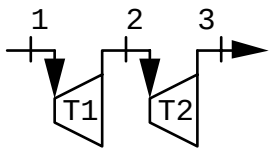

CV: T1, $h_1 = 3500.9$ kJ/kg, $s_1 = 6.7561$ kJ/kg K

Isentropic $s_{2s} = s_1 \Rightarrow h_{2s} = 3017.9$ kJ/kg

$w_{T1,s} = h_1 - h_{2s} = 483$ kJ/kg

Actual T1: $w_{T1,ac} = \eta_{T1}\, w_{T1,s} = 410.55 = h_1 - h_{2ac}$

$h_{2ac} = h_1 - w_{T1,ac} = 3090.35$ kJ/kg, $s_{2ac} = 6.8782$ kJ/kg K

CV: T2, $s_{3s} = s_{2ac} = 6.8782 \Rightarrow x_{3s} = (6.8782-1.091)/6.5029 = 0.8899$,

$h_{3s} = 340.47 + 0.8899 \times 2305.4 = 2392.2$ kJ/kg

$w_{T2,s} = h_{2ac} - h_{3s} = 698.15 \Rightarrow w_{T2,ac} = \eta_{T2}\, w_{T2,s} = 593.4$ kJ/kg

$\Rightarrow h_{3ac} = 2496.9$, $x_{3ac} = (2496.9 - 340.47)/2305.4 = 0.9354$,

$s_{3ac} = 1.091 + 0.9354 \times 6.5029 = 7.1736$ kJ/kg K

Actual T1: $i_{T1,ac} = T_0(s_{2ac}-s_1) = 298.15(6.8782 - 6.7561) = 36.4$ kJ/kg

$\Rightarrow w^R_{T1} = w_{T1,ac} + i = 447$ kJ/kg, $\eta_{II} = w_{T1,ac}/w^R_{T1} = \mathbf{0.918}$

Actual T2: $i_{T2,ac} = T_0(s_{3ac}-s_{2ac}) = 298.15(7.1736 - 6.8782) = 88.07$ kJ/kg

$\Rightarrow w^R_{T2} = w_{T2,ac} + i_{T2,ac} = 681.5$, $\eta_{II} = w_{T2,ac}/w^R_{T2} = \mathbf{0.871}$

11.113

The simple steam power plant shown in Problem 6.103 has a turbine with given inlet and exit states. Find the availability at the turbine exit, state 6. Find the second law efficiency for the turbine, neglecting kinetic energy at state 5.

Solution:

interpolation or software: $h_5 = 3404.3$ kJ/kg, $s_5 = 6.8953$ kJ/kg K

Table B.1.2: $x_6 = 0.92$ so $h_6 = 2393.2$ kJ/kg, $s_6 = 7.5501$ kJ/kg K

Flow availability (exergy) from Eq.10.24

$$\psi_6 = h_6 - h_0 - T_0(s_6 - s_0)$$

$$= 2393.2 - 104.89 - 298.15(6.8953 - 0.3674) = \mathbf{146.79\ kJ/kg}$$

In the absence of heat transfer the work is form Eq.10.9 or 10.39

$$w^{rev} = \psi_5 - \psi_6 = h_5 - h_6 - T_0(s_5 - s_6) = 1206.3 \text{ kJ/kg}$$

$$w_{ac} = h_5 - h_6 = 1011.1 \text{ kJ/kg}; \qquad \eta_{II} = w_{ac}/w^{rev} = \mathbf{0.838}$$

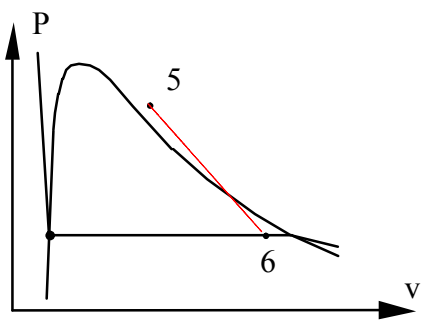

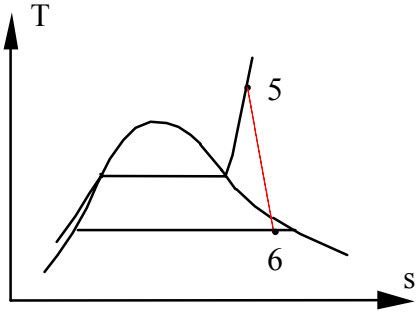

11.114

Consider the high-pressure closed feedwater heater in the nuclear power plant described in Problem 6.106. Determine its second law efficiency.

For this case with no work the second law efficiency is from Eq. 10.32:

$$\eta_{II} = \dot{m}_{16}(\psi_{18} - \psi_{16})/\dot{m}_{17}(\psi_{17} - \psi_{15})$$

Properties (taken from computer software):

h [kJ/kg]	$h_{15} = 585$	$h_{16} = 565$	$h_{17} = 2593$	$h_{18} = 688$
s [kJ/kgK]	$s_{15} = 1.728$	$s_{16} = 1.6603$	$s_{17} = 6.1918$	$s_{18} = 1.954$

The change in specific flow availability becomes

$$\psi_{18} - \psi_{16} = h_{18} - h_{16} - T_0(s_{18} - s_{16}) = 35.433 \text{ kJ/kg}$$

$$\psi_{17} - \psi_{15} = h_{17} - h_{15} - T_0(s_{17} - s_{15}) = 677.12 \text{ kJ/kg}$$

$$\eta_{II} = (75.6 \times 35.433)/(4.662 \times 677.12) = \mathbf{0.85}$$

11.115

Find the availability of the water at all the states in the steam power plant described in Problem 11.60. Assume the heat source in the boiler is at 600°C and the low-temperature reservoir is at 25°C. Give the second law efficiency of all the components.

From solution to 11.13 and 11.60:

States	0	1 sat liq.	2a	3	4a (x = 0.7913)
h [kJ/kg]	104.89	191.81	195.58	2804.14	2085.24
s [kJ/kg K]	0.3674	0.6492	0.6529	6.1869	6.5847

The entropy for state 2a was done using the compressed liquid entry at 2MPa at the given h. You could interpolate in the compressed liquid tables to get at 3 MPa or use the computer tables to be more accurate.

Definition of flow exergy: $\psi = h - h_o - T_o(s - s_o)$

$\psi_1 = 191.81 - 104.89 - 298.15(0.6492 - 0.3674) = 2.90$ kJ/kg

$\psi_{2a} = 195.58 - 104.89 - 298.15(0.6529 - 0.3674) = 5.57$ kJ/kg

$\psi_3 = 2804.14 - 104.89 - 298.15(6.1869 - 0.3674) = 964.17$ kJ/kg

$\psi_{4a} = 2085.24 - 104.89 - 298.15(6.5847 - 0.3674) = 126.66$ kJ/kg

$\eta_{II\ Pump} = (\psi_{2a} - \psi_1) / w_{p\ ac} = (5.57 - 2.9) / 3.775 = \mathbf{0.707}$

$\eta_{II\ Boiler} = (\psi_3 - \psi_{2a}) / [(1 - T_o/T_H)\ q_H]$

$= (964.17 - 3.18) / [0.658 \times 2608.6] = \mathbf{0.56}$

$\eta_{II\ Turbine} = w_{T\ ac} / (\psi_3 - \psi_{4a}) = 718.9 / (964.17 - 126.66) = \mathbf{0.858}$

$\eta_{II\ Cond} = \Delta\psi_{amb} / (\psi_{4a} - \psi_1) = \mathbf{0}$

Remark: Due to the interpolation the efficiency for the pump is not quite correct. It should have a second law efficiency greater than the isentropic efficiency.

11.116

Find two heat transfer rates, the total cycle exergy destruction and a second law efficiency for the refrigerator in Problem 11.80.

A refrigerator receives 500 W of electrical power to the compressor driving the cycle flow of R-134a. The refrigerator operates with a condensing temperature of 40^oC and a low temperature of -5^oC. Find the COP for the cycle.

State 1: $h_1 = 395.3$ kJ/kg, $s_1 = 1.7288$ kJ/kg-K

State 2: $s_2 = s_1$, $P_2 = P_3 = 1017$ kPa, $T_2 = 45^oC$, $h_2 = 425$ kJ/kg

$w_C = h_2 - h_1 = 425 - 395.3 = 29.7$ kJ/kg

State 3: $h_3 = 256.5$ kJ/kg, $s_3 = 1.1909$ kJ/kg-K

State 4: $h_4 = h_3 = 256.5$ kJ/kg,

$q_H = h_2 - h_3 = 425 - 256.5 = 168.5$ kJ/kg

$q_L = h_1 - h_4 = 138.8$ kJ/kg

Entropy Eq. for C.V. from -5^oC to $+40^oC$: $0 = \frac{q_L}{T_L} - \frac{q_H}{T_H} + s_{gen}$

$$i = T_o\, s_{gen} = T_o \left(\frac{q_H}{T_H} - \frac{q_L}{T_L}\right) = 298.15 \left(\frac{168.5}{313.2} - \frac{138.8}{268.15}\right) = 6.1 \text{ kJ/kg}$$

$$I = \dot{m}\, i = (\dot{W}/w_C)\, i = (0.5 \text{ kW}/ 29.7 \text{ kJ/kg})\, 6.1 \text{ kJ/kg} = \mathbf{0.103\ kW}$$

For this CV the 2nd law efficiency is

$$\eta_{II} = \frac{\text{output}}{\text{source}} = \frac{w_C - i}{w_C} = \frac{29.7 - 6.1}{29.7} = \mathbf{0.795}$$

Remark: The cold space gain in availability

$$\Delta\psi_L = \left(1 - \frac{T_o}{T_L}\right)(-q_L) = \left(1 - \frac{298.15}{268.15}\right)(-138.8) = 15.5 \text{ kJ/kg}$$

The high temperature reservoir also gains availability so

$$\Delta\psi_H = \left(1 - \frac{T_o}{T_H}\right) q_H = \left(1 - \frac{298.15}{313.15}\right) 168.5 = 8.07 \text{ kJ/kg}$$

For the refrigerator second law efficiency we neglect the exergy to T_H space as being useful so (this i-ref = $i + \Delta\psi_H$) and then

$$\eta_{II} = \frac{\text{output}}{\text{source}} = \frac{\Delta\psi_L}{w_C} = \frac{15.5}{29.7} = \mathbf{0.52}$$

The total balance is : $w_C = \Delta\psi_H + \Delta\psi_L + i = 8.07 + 15.5 + 6.1 = 29.67$ OK.

11.117

In a refrigerator saturated vapor R-134a at -20°C from the evaporator goes into a compressor that has a high pressure of 1000 kPa. After the compressor the actual temperature is measured to be 60°C. Find the actual specific work and the compressor 2nd law efficiency, using T_o = 298 K.

Inlet state: h_1 = 386.08 kJ/kg, s_1 = 1.7395 kJ/kg-K

Exit state: h_{2a} = 441.89 kJ/kg, s_{2a} = 1.7818 kJ/kg-K

Actual compressor: $w_{C\,ac} = h_{2a} - h_1$ = 441.89 – 386.08 = **55.81 kJ/kg**

Rev. work: $-w^{rev} = \psi_{2a} - \psi_1 = h_{2a} - h_1 - T_0(s_{2a} - s_1)$

$= 55.81 - 298\,(1.7818 - 1.7395) = 43.205$ kJ/kg

$$\eta_{II} = \frac{\text{output}}{\text{source}} = \frac{-w^{rev}}{w_{C\,ac}} = \frac{43.205}{55.81} = \mathbf{0.774}$$

11.118

What is the second law efficiency of the heat pump in Problem 11.81?

A heat pump for heat upgrade uses ammonia with a low temperature of 25°C and a high pressure of 5000 kPa. If it receives 1 MW of shaft work what is the rate of heat transfer at the high temperature?

State 1: $h_1 = 1463.5$ kJ/kg, $s_1 = 5.0293$ kJ/kgK

State 3: $h_3 = h_f = 631.9$ kJ/kg, $s_3 = 2.1100$ kJ/kg-K

Entropy compressor: $s_2 = s_1$ => $T_2 = 156°C$, $h_2 = 1709.1$ kJ/kg

Energy eq. compressor: $w_C = h_2 - h_1 = 245.6$ kJ/kg

Energy condenser: $q_H = h_2 - h_3 = 1077.2$ kJ/kg

Exergy output:

$$\Delta\psi_H = \psi_2 - \psi_3 = h_2 - h_3 - T_0(s_2 - s_3)$$
$$= 1077.2 - 298\ (5.0293 - 2.1100)$$
$$= 207.25 \text{ kJ/kg}$$

$$\eta_{II} = \frac{\text{output}}{\text{source}} = \frac{\Delta\psi_H}{w_{C\ ac}} = \frac{207.25}{245.6} = \mathbf{0.844}$$

11.119

The condenser in a refrigerator receives R-134a at 700 kPa, 50°C and it exits as saturated liquid at 25°C. The flowrate is 0.1 kg/s and the condenser has air flowing in at ambient 15°C and leaving at 35°C. Find the minimum flow rate of air and the heat exchanger second-law efficiency.

C.V. Total heat exchanger.
Energy Eq.6.10

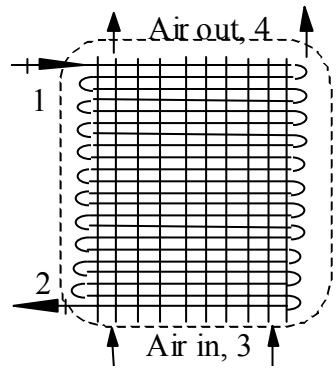

$$\dot{m}_1 h_1 + \dot{m}_a h_3 = \dot{m}_1 h_2 + \dot{m}_a h_4$$

$$\Rightarrow \quad \dot{m}_a = \dot{m}_1 \times \frac{h_1 - h_2}{h_4 - h_3}$$

$$= 0.1 \times \frac{436.89 - 234.59}{1.004(35 - 15)} = \mathbf{1.007\ kg/s}$$

Availability from Eq.10.24

$$\psi_1 - \psi_2 = h_1 - h_2 - T_0(s_1 - s_2) = 436.89 - 234.59$$

$$- 288.15(1.7919 - 1.1201) = 8.7208 \text{ kJ/kg}$$

$$\psi_4 - \psi_3 = h_4 - h_3 - T_0(s_4 - s_3)$$

$$= 1.004(35 - 15) - 288.15 \times 1.004 \times \ln \frac{308.15}{288.15} = +0.666 \text{ kJ/kg}$$

Efficiency from Eq.10.30

$$\eta_{II} = \frac{\dot{m}_a (\psi_4 - \psi_3)}{\dot{m}_1 (\psi_1 - \psi_2)} = \frac{1.007 \times 0.666}{0.1 \times 8.7208} = \mathbf{0.77}$$

Combined Cycles

11.120

A binary system power plant uses mercury for the high-temperature cycle and water for the low-temperature cycle, as shown in Fig. 12.20. The temperatures and pressures are shown in the corresponding *T–s* diagram. The maximum temperature in the steam cycle is where the steam leaves the superheater at point 4 where it is 500°C. Determine the ratio of the mass flow rate of mercury to the mass flow rate of water in the heat exchanger that condenses mercury and boils the water and the thermal efficiency of this ideal cycle.

The following saturation properties for mercury are known

P, MPa	T_g, °C	h_f, kJ/kg	h_g, kJ/kg	s_f kJ/kgK	s_g, kJ/kgK
0.04	309	42.21	335.64	0.1034	0.6073
1.60	562	75.37	364.04	0.1498	0.4954

Solution:

For the mercury cycle:

$$s_d = s_c = 0.4954 = 0.1034 + x_d \times 0.5039, \quad x_d = 0.7779$$

$$h_b = h_a - w_{P\,HG} \approx h_a \text{ (since } v_F \text{ is very small)}$$

$$q_H = h_c - h_a = 364.04 - 42.21 = 321.83 \text{ kJ/kg}$$

$$q_L = h_d - h_a = 270.48 - 42.21 = 228.27 \text{ kJ/kg}$$

For the steam cycle:

$$s_5 = s_4 = 7.0097 = 0.6493 + x_5 \times 7.5009, \quad x_5 = 0.8480$$

$$h_5 = 191.83 + 0.848 \times 2392.8 = 2220.8$$

$$w_P \approx v_1(P_2 - P_1) = 0.00101(4688 - 10) = 4.7 \text{ kJ/kg}$$

$$h_2 = h_1 + w_P = 191.8 + 4.7 = 196.5$$

$$q_H \text{ (from Hg)} = h_3 - h_2 = 2769.9 - 196.5 = 2600.4$$

$$q_H \text{ (ext. source)} = h_4 - h_3 = 3437.4 - 2796.9 = 640.5$$

CV: Hg condenser - H_2O boiler: 1st law: $m_{Hg}(h_d - h_a) = m_{H2O}(h_3 - h_2)$

$$m_{Hg}/m_{H2O} = \frac{2796.9 - 196.5}{270.48 - 42.21} = \mathbf{11.392}$$

$$q_{H\,TOTAL} = (m_{Hg}/m_{H2O})(h_c - h_b) + (h_4 - h_3) \quad \text{(for 1 kg } H_2O\text{)}$$

$$= 11.392 \times 321.83 + 640.5 = 4306.8 \text{ kJ}$$

All q_L is from the H_2O condenser:

$$q_L = h_5 - h_1 = 2220.8 - 191.8 = 2029.0 \text{ kJ}$$

$$w_{NET} = q_H - q_L = 4306.8 - 2029.0 = 2277.8 \text{ kJ}$$

$$\eta_{TH} = w_{NET}/q_H = 2277.8/4306.8 = \mathbf{0.529}$$

11.121

A Rankine steam power plant should operate with a high pressure of 3 MPa, a low pressure of 10 kPa, and the boiler exit temperature should be 500°C. The available high-temperature source is the exhaust of 175 kg/s air at 600°C from a gas turbine. If the boiler operates as a counterflowing heat exchanger where the temperature difference at the pinch point is 20°C, find the maximum water mass flow rate possible and the air exit temperature.

Solution:

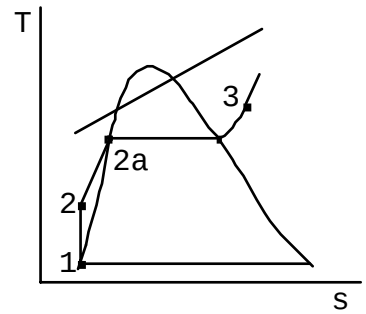

C.V. Pump

$w_P = h_2 - h_1 = v_1(P_2 - P_1)$

$= 0.00101(3000 - 10) = 3.02$ kJ/kg

$h_2 = h_1 + w_P = 191.83 + 3.02 = 194.85$ kJ/kg

Heat exchanger water states

State 2a: $T_{2a} = T_{SAT} = 233.9$ °C

$h_{2a} = 1008.42$ kJ/kg

State 3: $h_3 = 3456.5$ kJ/kg

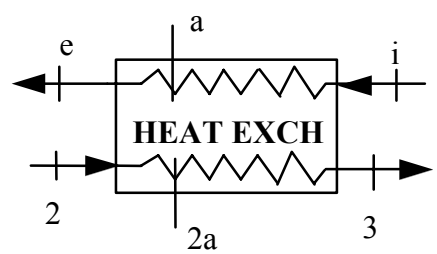

Heat exchanger air states

inlet: $h_{air,in} = 903.16$ kJ/kg

State 2a: $h_{air}(T_{2a} + 20) = 531.28$ kJ/kg

Air temperature should be 253.9°C at the point where the water is at state 2a.

C.V. Section 2a-3, i-a

$$\dot{m}_{H_2O}(h_3 - h_{2a}) = \dot{m}_{air}(h_i - h_a)$$

$$\dot{m}_{H_2O} = 175 \frac{903.16 - 531.28}{3456.5 - 1008.42} = \mathbf{26.584\ kg/s}$$

Take C.V. Total: $\dot{m}_{H_2O}(h_3 - h_2) = \dot{m}_{air}(h_i - h_e)$

$\Rightarrow\ h_e = h_i - \dot{m}_{H_2O}(h_3 - h_2)/\dot{m}_{air}$

$= 903.6 - 26.584(3456.5 - 194.85)/175 = 408.13$ kJ/kg

$\Rightarrow\ T_e = 406.7$ K = **133.6 °C**, $T_e > T_2 = 46.5$ °C OK.

11.122

Consider an ideal dual-loop heat-powered refrigeration cycle using R-12 as the working fluid, as shown in Fig. P11.122. Saturated vapor at 90°C leaves the boiler and expands in the turbine to the condenser pressure. Saturated vapor at –15°C leaves the evaporator and is compressed to the condenser pressure. The ratio of the flows through the two loops is such that the turbine produces just enough power to drive the compressor. The two exiting streams mix together and enter the condenser. Saturated liquid leaving the condenser at 45°C is then separated into two streams in the necessary proportions. Determine the ratio of mass flow rate through the power loop to that through the refrigeration loop. Find also the performance of the cycle, in terms of the ratio $\dot{Q}_L / \dot{Q}_H$.

Solution:

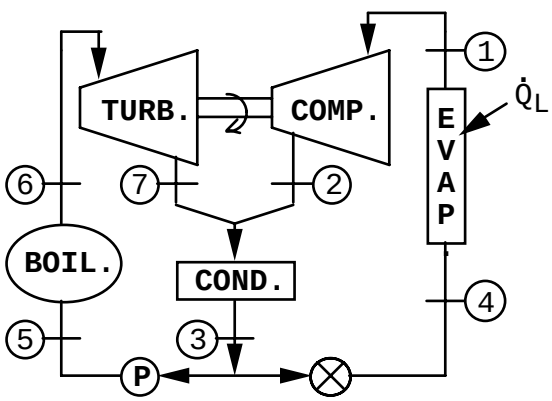

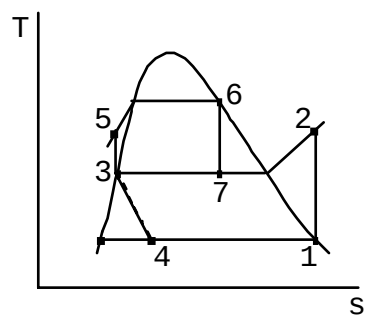

T_1 = -15 °C sat. vap.

Table B.3.1 $T_6 = 105^oC$ sat. vapor => $P_5 = P_6 = 3.6509$ MPa

Table B.3.1 $T_3 = 45^oC$ sat. liquid => $P_2 = P_3 = P_7 = 1.0843$ MPa

$h_1 = 180.97$; $h_3 = h_4 = 79.71$; $h_6 = 206.57$

C.V. Turbine

$s_7 = s_6 = 0.6325 = 0.2877 + x_7 \times 0.3934$; $x_7 = 0.8765$

$h_7 = 79.71 + 0.8765 \times 125.16 = 189.41$

C.V. Compressor (computer tables are used for this due to value of P)

$s_2 = s_1 = 0.7051$, P_2 => $T_2 = 54.7^oC$, $h_2 = 212.6$ kJ/kg

CV: turbine + compressor

Continuity Eq.: $\dot{m}_1 = \dot{m}_2$, $\dot{m}_6 = \dot{m}_7$;

Energy Eq.: $\dot{m}_1 h_1 + \dot{m}_6 h_6 = \dot{m}_2 h_2 + \dot{m}_7 h_7$

$$\dot{m}_6/\dot{m}_1 = (212.6 - 180.97)/(206.57 - 189.41) = \mathbf{1.843}$$

CV: pump

$$w_P = v_3(P_5 - P_3) = 0.000811(3651 - 1084) = 2.082 \text{ kJ/kg}$$

$$h_5 = h_3 + w_P = 81.79 \text{ kJ/kg}$$

CV: evaporator $\Rightarrow \quad \dot{Q}_L = \dot{m}_1(h_1 - h_4)$

CV: boiler $\Rightarrow \quad \dot{Q}_H = \dot{m}_6(h_6 - h_5)$

$$\beta = \frac{\dot{Q}_L}{\dot{Q}_H} = \frac{\dot{m}_1(h_1 - h_4)}{\dot{m}_6(h_6 - h_5)} = \frac{180.97 - 79.71}{1.843(206.57 - 81.79)} = \mathbf{0.44}$$

11.123

For a cryogenic experiment heat should be removed from a space at 75 K to a reservoir at 180 K. A heat pump is designed to use nitrogen and methane in a cascade arrangement (see Fig. 11.25), where the high temperature of the nitrogen condensation is at 10 K higher than the low-temperature evaporation of the methane. The two other phase changes take place at the listed reservoir temperatures. Find the saturation temperatures in the heat exchanger between the two cycles that gives the best coefficient of performance for the overall system.

The nitrogen cycle is the bottom cycle and the methane cycle is the top cycle. Both are standard refrigeration cycles.

$T_{Hm} = 180\ K = T_{3m}$, $T_{LN} = 75\ K = T_{4N} = T_{1N}$

$T_{Lm} = T_{4m} = T_{1m} = T_{3N} - 10$, Trial and error on T_{3N} or T_{Lm}.

For each cycle we have,

$-w_C = h_2 - h_1$, $s_2 = s_1$, $-q_H = h_2 - h_3$, $q_L = h_1 - h_4 = h_1 - h_3$

Nitrogen: $T_4 = T_1 = 75\ K \Rightarrow h_1 = 74.867$ kJ/kg, $s_1 = 5.4609$ kJ/kg K

N_2	T_3	h_3	P_2	h_2	$-w_c$	$-q_H$	q_L
a)	120	-17.605	2.5125	202.96	128.1	220.57	92.47
b)	115	-34.308	1.9388	188.35	113.5	222.66	109.18
c)	110	-48.446	1.4672	173.88	99.0	222.33	123.31

Methane: $T_3 = 180\ K \Rightarrow h_3 = -0.5$ kJ/kg, $P_2 = 3.28655$ MPa

CH_4	T_4	h_1	s_1	h_2	$-w_c$	$-q_H$	q_L
a)	110	221	9.548	540.3	319.3	540.8	221.5
b)	105	212.2	9.691	581.1	368.9	581.6	212.7
c)	100	202.9	9.851	629.7	426.8	630.2	203.4

The heat exchanger that connects the cycles transfers a Q

$$\dot{Q}_{Hn} = q_{Hn}\,\dot{m}_n = \dot{Q}_{Lm} = q_{Lm}\,\dot{m}_m \Rightarrow \dot{m}_m/\dot{m}_n = q_{Hn}/q_{Lm}$$

The overall unit then has

$$\dot{Q}_{L\ 75\ K} = \dot{m}_n\, q_{Ln}\ ;\quad \dot{W}_{tot\ in} = -(\dot{m}_n w_{cn} + \dot{m}_m w_{cm})$$

$$\beta = \dot{Q}_{L\ 75\ K}/\dot{W}_{tot\ in} = q_{Ln}/[-w_{cn} - (\dot{m}_m/\dot{m}_n) w_{cm}]$$

Case	$\dot{m}_m/\dot{m}_n$	$w_{cn}+(\dot{m}_m/\dot{m}_n)w_{cm}$	β
a)	0.996	446.06	0.207
b)	1.047	499.65	0.219
c)	1.093	565.49	0.218

A maximum coefficient of performance is between case b) and c).

11.124

For Problem 11.121, determine the change of availability of the water flow and that of the air flow. Use these to determine a second law efficiency for the boiler heat exchanger.

From solution to 11.121:

$\dot{m}_{H2O} = 26.584$ kg/s, $h_2 = 194.85$ kJ/kg, $s_2 = 0.6587$ kJ/kg K

$h_3 = 3456.5$ kJ/kg, $s_3 = 7.2338$, $s^\circ_{Ti} = 7.9820$, $s^\circ_{Te} = 7.1762$ kJ/kg K

$h_i = 903.16$ kJ/kg, $h_e = 408.13$ kJ/kg

$\psi_3 - \psi_2 = h_3 - h_2 - T_0(s_3 - s_2) = 1301.28$ kJ/kg

$\psi_i - \psi_e = h_i - h_e - T_0(s^\circ_{Ti} - s^\circ_{Te}) = 254.78$ kJ/kg

$$\eta_{II} = \frac{(\psi_3 - \psi_2)\dot{m}_{H2O}}{(\psi_i - \psi_e)\dot{m}_{air}} = \frac{1301.28 \times 26.584}{254.78 \times 175} = \mathbf{0.776}$$

Review Problems

11.125

Do Problem 11.27 with R-134a as the working fluid in the Rankine cycle.

Consider the ammonia Rankine-cycle power plant shown in Fig. P11.27, a plant that was designed to operate in a location where the ocean water temperature is 25°C near the surface and 5°C at some greater depth. The mass flow rate of the working fluid is 1000 kg/s.

a. Determine the turbine power output and the pump power input for the cycle.
b. Determine the mass flow rate of water through each heat exchanger.
c. What is the thermal efficiency of this power plant?

Solution:

a) Turbine

$s_2 = s_1 = 1.7183 = 1.0485 + x_2 \times 0.6733 \quad \Rightarrow \quad x_2 = 0.9948$

$h_2 = 213.58 + 0.9948 \times 190.65 = 403.24$ kJ/kg

$w_T = h_1 - h_2 = 409.84 - 403.24 = 6.6$ kJ/kg

$\dot{W}_T = \dot{m}w_T = 6600$ kW

Pump: $w_P \approx v_3(P_4 - P_3) = 0.000794(572.8 - 415.8) = 0.125$ kJ/kg

$w_P = w_P/\eta_S = 0.125 \quad \Rightarrow \quad \dot{W}_P = \dot{m}w_P =$ **125 kW**

b) Consider the condenser heat transfer to the low T water

$\dot{Q}_{\text{to low T H2O}} = 1000(403.24 - 213.58) = 189\ 660$ kW

$\dot{m}_{\text{low T H2O}} = \dfrac{189660}{29.38 - 20.98} =$ **22 579 kg/s**

$h_4 = h_3 - w_P = 213.58 + 0.125 = 213.71$ kJ/kg

Now consider the boiler heat transfer from the high T water

$\dot{Q}_{\text{from high T H2O}} = 1000(409.84 - 213.71) = 196\ 130$ kW

$\dot{m}_{\text{high T H2O}} = \dfrac{196130}{104.87 - 96.50} =$ **23 432 kg/s**

c) $\eta_{TH} = \dot{W}_{NET}/\dot{Q}_H = \dfrac{6600 - 125}{196130} =$ **0.033**

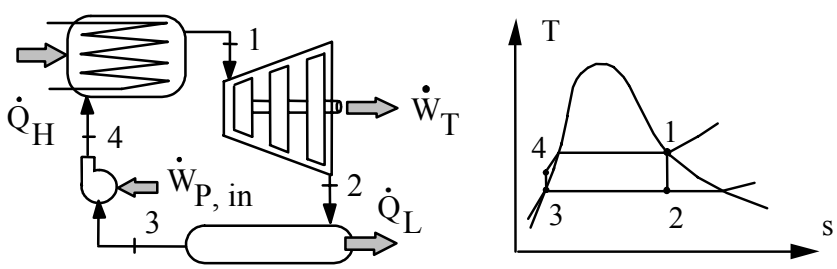

11.126

A simple steam power plant is said to have the four states as listed: 1: (20°C, 100 kPa), 2: (25°C, 1 MPa), 3: (1000°C, 1 MPa), 4: (250°C, 100 kPa) with an energy source at 1100°C and it rejects energy to a 0°C ambient. Is this cycle possible? Are any of the devices impossible?

Solution:

The cycle should be like Figure 11.3 for an ideal or Fig.11.9 for an actual pump and turbine in the cycle. We look the properties up in Table B.1:

State 1: $h_1 = 83.94$, $s_1 = 0.2966$ State 2: $h_2 = 104.87$, $s_2 = 0.3673$

State 3: $h_3 = 4637.6$, $s_3 = 8.9119$ State 4: $h_4 = 2974.3$, $s_4 = 8.0332$

We may check the overall cycle performance

Boiler: $q_H = h_3 - h_2 = 4637.6 - 104.87 = 4532.7$ kJ/kg

Condenser: $q_L = h_4 - h_1 = 2974.3 - 83.94 = 2890.4$ kJ/kg

$\eta_{cycle} = q_{net} / q_H = (q_H - q_L) / q_H = 1642.3 / 4532.7 = 0.362$

$$\eta_{carnot} = 1 - T_L / T_H = 1 - \frac{273.15}{273.15 + 1100} = \mathbf{0.80} > \eta_{cycle} \quad \textbf{OK}$$

Check the second law for the individual devices:

C.V. Boiler plus wall to reservoir

$$s_{gen} = s_3 - s_2 - \frac{q_H}{T_{res}} = 8.9119 - 0.3673 - \frac{4532.7}{1373} = 5.24 \text{ kJ/kg K} > 0 \quad \textbf{OK}$$

C.V. Condenser plus wall to reservoir

$$s_{gen} = s_1 - s_4 + \frac{q_L}{T_{res}} = 0.2966 - 8.0332 + \frac{2890.4}{273} = 2.845 \text{ kJ/kg K} > 0 \quad \textbf{OK}$$

C.V. Pump: $w_p = h_2 - h_1 = 20.93$ kJ/kg ;

$s_{gen} = s_2 - s_1 = 0.3673 - 0.2966 = 0.0707$ kJ/kg K > 0 **OK**

C.V. Turbine: $w_T = h_3 - h_4 = 4637.6 - 2974.3 = 1663.3$ kJ/kg

$s_{gen} = s_4 - s_3 = 8.0332 - 8.9119 = - 0.8787$ kJ/kg K

$s_{gen} < 0$ **NOT POSSIBLE**

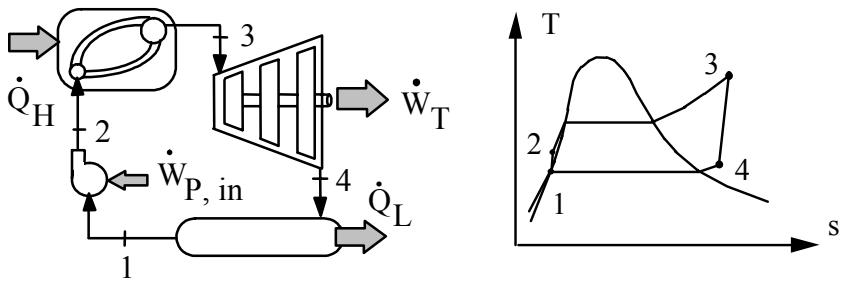

11.127

Consider an ideal combined reheat and regenerative cycle in which steam enters the high-pressure turbine at 3.0 MPa, 400°C, and is extracted to an open feedwater heater at 0.8 MPa with exit as saturated liquid. The remainder of the steam is reheated to 400°C at this pressure, 0.8 MPa, and is fed to the low-pressure turbine. The condenser pressure is 10 kPa. Calculate the thermal efficiency of the cycle and the net work per kilogram of steam.

Solution:

In this setup the flow is separated into fractions x and 1-x after coming out of T1. The two flows are recombined in the FWH.

C.V. T1 $\quad s_6 = s_5 = 6.9211$ kJ/kg K $\quad \Rightarrow \quad h_6 = 2891.6$ kJ/kg

$$w_{T1} = h_5 - h_6 = 3230.82 - 2891.6 = 339.22 \text{ kJ/kg}$$

C.V. Pump 1:

$$w_{P1} = h_2 - h_1 = v_1(P_2 - P_1) = 0.00101(800 - 10) = 0.798 \text{ kJ/kg}$$

$$\Rightarrow \quad h_2 = h_1 + w_{P1} = 191.81 + 0.798 = 192.61 \text{ kJ/kg}$$

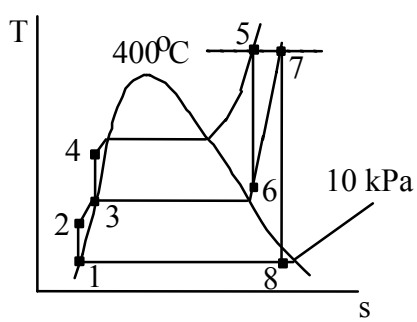

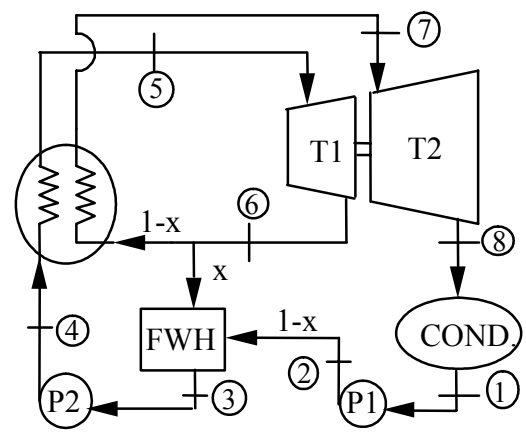

C.V. FWH, $\quad h_3 = h_f = 721.1$

Energy equation per unit mass flow exit at 3:

$$x\, h_6 + (1 - x)\, h_2 = h_3 \qquad \Rightarrow \qquad x = \frac{h_3 - h_2}{h_6 - h_2} = \frac{721.1 - 192.61}{2891.6 - 192.61} = 0.1958$$

C.V. Pump 2

$$w_{P2} = h_4 - h_3 = v_3(P_4 - P_3) = 0.001115(3000 - 800) = 2.45 \text{ kJ/kg}$$

$$\Rightarrow \quad h_4 = h_3 + w_{P2} = 721.1 + 2.45 = 723.55 \text{ kJ/kg}$$

C.V. Boiler/steam generator including reheater.

Total flow from 4 to 5 only fraction 1-x from 6 to 7

$$q_H = h_5 - h_4 + (1 - x)(h_7 - h_6) = 2507.3 + 301.95 = 2809.3 \text{ kJ/kg}$$

C.V. Turbine 2

$$s_8 = s_7 = 7.5715 \text{ kJ/kg K} \quad \Rightarrow \quad x_8 = (7.5715 - 0.6492)/7.501 = 0.92285$$

$$h_8 = h_f + x_8\, h_{fg} = 191.81 + 0.92285 \times 2392.82 = 2400.0 \text{ kJ/kg}$$

$$w_{T2} = h_7 - h_8 = 3267.07 - 2400.02 = 867.05 \text{ kJ/kg}$$

Sum the work terms to get net work. Total flow through T1 only fraction 1-x through T2 and P1 and after FWH we have the total flow through P2.

$$w_{net} = w_{T1} + (1 - x)\, w_{T2} - (1 - x)\, w_{P1} - w_{P2}$$

$$= 339.2 + 697.3 - 0.64 - 2.45 = \mathbf{1033.41\ kJ/kg}$$

$$\eta_{cycle} = w_{net} / q_H = 1033.41 / 2809.3 = \mathbf{0.368}$$

11.128

An ideal steam power plant is designed to operate on the combined reheat and regenerative cycle and to produce a net power output of 10 MW. Steam enters the high-pressure turbine at 8 MPa, 550°C, and is expanded to 0.6 MPa, at which pressure some of the steam is fed to an open feedwater heater, and the remainder is reheated to 550°C. The reheated steam is then expanded in the low-pressure turbine to 10 kPa. Determine the steam flow rate to the high-pressure turbine and the power required to drive each of the pumps.

a)

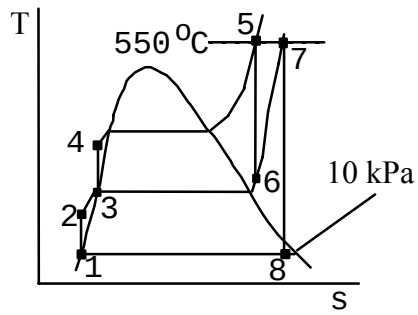

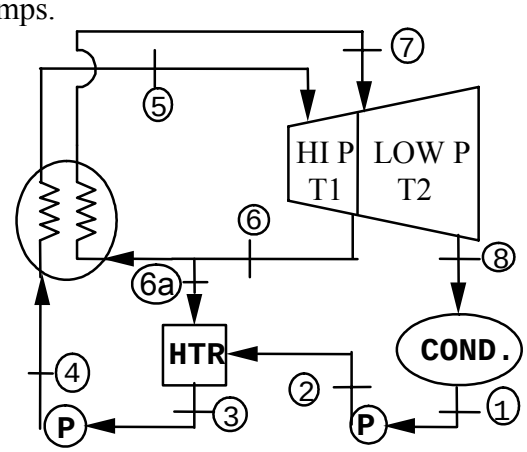

b) $-w_{P12} = 0.00101(600 - 10) = 0.6$ kJ/kg

$h_2 = h_1 - w_{P12} = 191.8 + 0.6 = 192.4$ kJ/kg

$-w_{P34} = 0.00101(8000 - 600) = 8.1$ kJ/kg

$h_4 = h_3 - w_{P34} = 670.6 + 8.1 = 678.7$; $h_5 = 3521.0$ kJ/kg,

$s_6 = s_5 = 6.8778 \Rightarrow T_6 = 182.32\ ^oC \quad h_6 = 2810.0$ kJ/kg,

$h_7 = 3591.9, \quad s_8 = s_7 = 8.1348 = 0.6493 + x_8 \times 7.5009 \Rightarrow x_8 = 0.9979$

$h_8 = 191.83 + 0.9979 \times 2392.8 = 2579.7$ kJ/kg

CV: heater

Cont: $m_{6a} + m_2 = m_3 = 1$ kg, Energy Eq: $m_{6a}h_6 + m_2h_2 = m_3h_3$

$$m_{6a} = \frac{670.6 - 192.4}{2810.0 - 192.4} = 0.1827, \quad m_2 = m_7 = 1 - m_{6a} = 0.8173$$

CV: turbine $w_T = (h_5 - h_6) + (1 - m_{6a})(h_7 - h_8)$

$= 3521 - 2810 + 0.8173(3591.9 - 2579.7) = 1538.2$ kJ/kg

CV: pumps

$w_P = m_2w_{P12} + m_4w_{P34} = 0.8214\times(-0.6) + 1\times(-8.1) = -8.6$ kJ/kg

$w_{Net} = 1538.2 - 8.6 = 1529.6$ kJ/kg (m_5)

$\dot{m}_5 = \dot{W}_{Net}/w_{Net} = 10000/1529.6 =$ **6.53 kg/s**

11.129

Steam enters the turbine of a power plant at 5 MPa and 400°C, and exhausts to the condenser at 10 kPa. The turbine produces a power output of 20 000 kW with an isentropic efficiency of 85%. What is the mass flow rate of steam around the cycle and the rate of heat rejection in the condenser? Find the thermal efficiency of the power plant.

Solution: $\dot{W}_T = 20\,000$ kW and $\eta_{Ts} = 85$ %

State 3: $h_3 = 3195.6$ kJ/kg , $s_3 = 6.6458$ kJ/kgK

State 1: $P_1 = P_4 = 10$ kPa , sat liq , $x_1 = 0$

$T_1 = 45.8^oC$, $h_1 = h_f = 191.8$ kJ/kg , $v_1 = v_f = 0.00101$ m^3/kg

C.V Turbine : Energy Eq.: $q_T + h_3 = h_4 + w_T$; $q_T = 0$

$w_T = h_3 - h_4$, Assume Turbine is isentropic

$s_{4s} = s_3 = 6.6458$ kJ/kgK , $s_{4s} = s_f + x_{4s}\, s_{fg}$, solve for $x_{4s} = 0.7994$

$h_{4s} = h_f + x_{4s}h_{fg} = 1091.0$ kJ/kg

$w_{Ts} = h_3 - h_{4s} = 1091$ kJ/kg , $w_T = \eta_{Ts}w_{Ts} = 927.3$ kJ/kg

$$\dot{m} = \frac{\dot{W}_T}{w_T} = \mathbf{21.568\ kg/s}\ , \qquad h_4 = h_3 - w_T = 2268.3 \text{ kJ/kg}$$

C.V. Condenser: Energy Eq.: $h_4 = h_1 + q_c + w_c$; $w_c = 0$

$q_c = h_4 - h_1 = 2076.5$ kJ/kg , $\dot{Q}_c = \dot{m}\, q_c = \mathbf{44786\ kW}$

C.V. Pump: Assume adiabatic, reversible and incompressible flow

$w_{ps} = \int v\, dP = v_1(P_2 - P_1) = 5.04$ kJ/kg

Energy Eq.: $h_2 = h_1 + w_p = 196.8$ kJ/kg

C.V Boiler : Energy Eq.: $q_B + h_2 = h_3 + w_B$; $w_B = 0$

$q_B = h_3 - h_2 = 2998.8$ kJ/kg

$w_{net} = w_T - w_P = 922.3$ kJ/kg

$\eta_{th} = w_{net} / q_B = \mathbf{0.307}$

11.130

In one type of nuclear power plant, heat is transferred in the nuclear reactor to liquid sodium. The liquid sodium is then pumped through a heat exchanger where heat is transferred to boiling water. Saturated vapor steam at 5 MPa exits this heat exchanger and is then superheated to 600°C in an external gas-fired superheater. The steam enters the reversible turbine, which has one (open-type) feedwater extraction at 0.4 MPa, and the condenser pressure is 7.5 kPa. Determine the heat transfer in the reactor and in the superheater to produce a net power output of 1 MW.

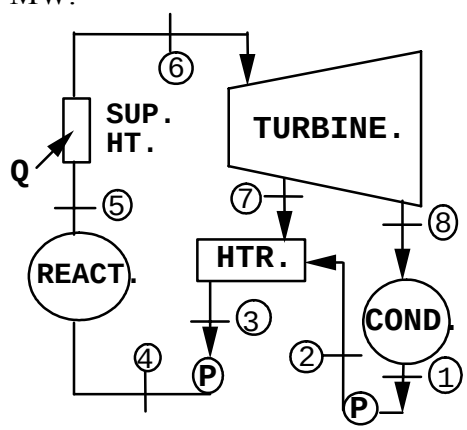

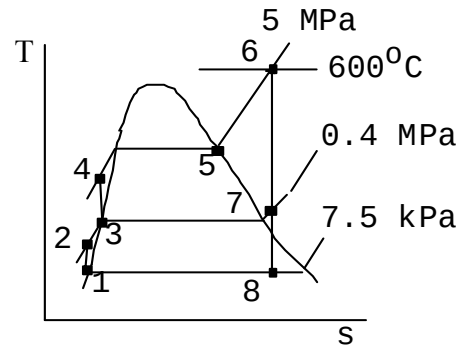

$\dot{W}_{NET} = 1$ MW

$-w_{P12} = 0.001008(400 - 7.5) = 0.4$ kJ/kg

$h_2 = h_1 - w_{P12} = 168.8 + 0.4 = 169.2$ kJ/kg

$-w_{P34} = 0.001084(5000 - 400) = 5.0$ kJ/kg

$h_4 = h_3 - w_{P34} = 604.7 + 5.0 = 609.7$ kJ/kg

$s_7 = s_6 = 7.2589$, $P_7 = 0.4$ MPa => $T_7 = 221.2$ °C, $h_7 = 2904.5$ kJ/kg

$s_8 = s_6 = 7.2589 = 0.5764 + x_8 \times 7.6750$; $x_8 = 0.8707$

$h_8 = 168.8 + 0.8707 \times 2406.0 = 2263.7$ kJ/kg

CV: heater

cont: $\dot{m}_2 + \dot{m}_7 = \dot{m}_3$, Energy Eq.: $(1 - y)\, h_2 + y\, h_7 = h_3$

$y = \dot{m}_7 / \dot{m}_3 = (604.7 - 169.2)/(2904.5 - 169.2) = 0.1592$

CV: turbine

$w_T = (h_6 - h_7) + (1 - y)(h_7 - h_8)$

$= 3666.5 - 2904.5 + 0.8408\,(2904.5 - 2263.7) = 1300.8$ kJ/kg

CV: pumps

$$w_P = (1 - y)\, w_{P12} + w_{P34} = 0.8408\ (-0.4) + 1(-5.0) = -5.33 \text{ kJ/kg}$$

$$w_{NET} = 1300.8 - 5.3 = 1295.5 \quad \Rightarrow \quad \dot{m} = 1000/1295.5 = 0.7719 \text{ kg/s}$$

CV: reactor

$$\dot{Q}_{REACT} = \dot{m}(h_5 - h_4) = 0.7719\ (2794.3 - 609.7) = \mathbf{1686\ kW}$$

CV: superheater

$$\dot{Q}_{SUP} = 0.7719\ (h_6 - h_5) = 0.7719\ (3666.5 - 2794.3) = \mathbf{673\ kW}$$

11.131

An industrial application has the following steam requirement: one 10-kg/s stream at a pressure of 0.5 MPa and one 5-kg/s stream at 1.4 MPa (both saturated or slightly superheated vapor). It is obtained by cogeneration, whereby a high-pressure boiler supplies steam at 10 MPa, 500°C to a reversible turbine. The required amount is withdrawn at 1.4 MPa, and the remainder is expanded in the low-pressure end of the turbine to 0.5 MPa providing the second required steam flow.

a. Determine the power output of the turbine and the heat transfer rate in the boiler.

b. Compute the rates needed were the steam generated in a low-pressure boiler without cogeneration. Assume that for each, 20°C liquid water is pumped to the required pressure and fed to a boiler.

Solution:

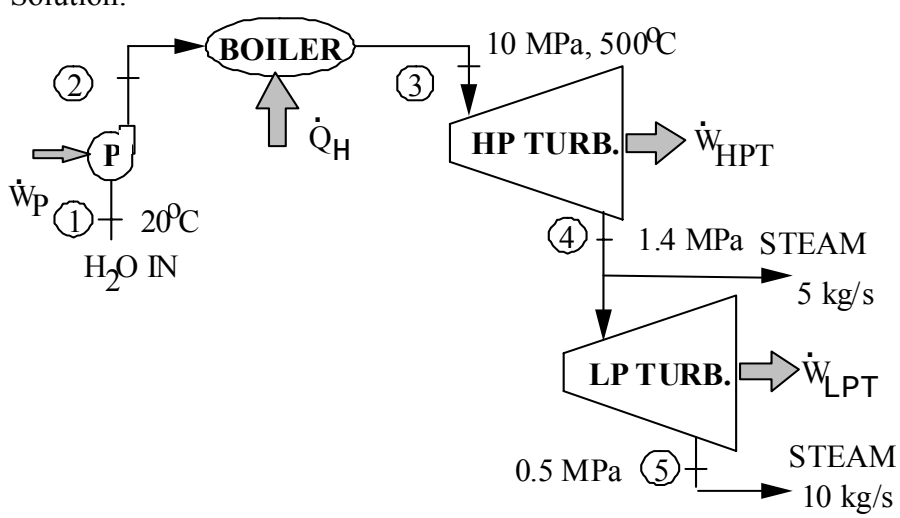

a) **With cogeneration**

high-pressure turbine.

$$s_4 = s_3 = 6.5966 \text{ kJ/kg K} \quad \Rightarrow \quad T_4 = 219.9\ ^{o}\text{C},\ h_4 = 2852.6 \text{ kJ/kg}$$

$$w_{S\ HPT} = h_3 - h_4 = 3373.7 - 2852.6 = 521.1 \text{ kJ/kg}$$

low-pressure turbine

$$s_5 = s_4 = 6.5966 = 1.8607 + x_5 \times 4.9606,\ \ x_5 = 0.9547$$

$$h_5 = 640.23 + 0.9547 \times 2108.5 = 2653.2 \text{ kJ/kg}$$

$$w_{S\ LPT} = h_4 - h_5 = 2852.6 - 2653.2 = 199.4 \text{ kJ/kg}$$

$$\dot{W}_{TURB} = 15 \times 521.1 + 10 \times 199.4 = \mathbf{9810\ kW}$$

$$\dot{W}_P = 15 \times 0.001002\ (10\ 000 - 2.3) = 150.3 \text{ kW}$$

$$h_2 = h_1 + w_P = 83.96 + 10.02 = 94.0 \text{ kJ/kg}$$

$\dot{Q}_H = \dot{m}_1(h_3 - h_2) = 15(3373.7 - 94.0) =$ **49 196 kW**

b) **Without cogeneration**

This is to be compared to the amount of heat required to supply 5 kg/s of 1.4 MPa sat. vap. plus 10 kg/s of 0.5 MPa sat. vap. from 20°C water.

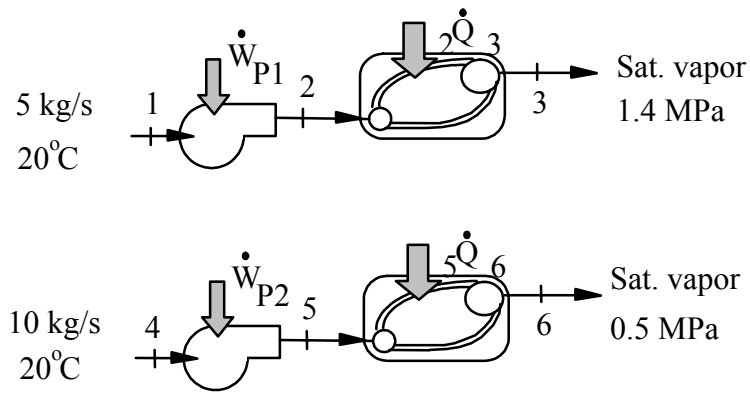

Pump 1 and boiler 1

$w_P = 0.001002(1400 - 2.3) = 14.0$ kJ/kg,

$h_2 = h_1 + w_P = 83.96 + 14.0 = 85.4$ kJ/kg

$_2\dot{Q}_3 = \dot{m}_1(h_3 - h_2) = 5(2790.0 - 85.4) = 13\ 523$ kW

$\dot{W}_{P1} = 5 \times 14.0 = 7$ kW

Pump 2 and boiler 2

$h_5 = h_4 + w_{P2} = 83.96 + 0.001002(500 - 2.3) = 84.5$ kJ/kg

$_5\dot{Q}_6 = \dot{m}_4(h_6 - h_5) = 10(2748.7 - 84.5) = 26\ 642$ kW

$\dot{W}_{P2} = 10 \times 0.5 = 5$ kW

Total $\dot{Q}_H = 13523 + 26642 =$ **40 165 kW**

Notice here that the extra heat transfer is about 9000 kW to run the turbines but that provides 9800 kW of work for electricity (a 100% conversion of the extra Q to W).

11.132

The effect of a number of open feedwater heaters on the thermal efficiency of an ideal cycle is to be studied. Steam leaves the steam generator at 20 MPa, 600°C, and the cycle has a condenser pressure of 10 kPa. Determine the thermal efficiency for each of the following cases. **A:** No feedwater heater. **B**: One feedwater heater operating at 1 MPa. **C:** Two feedwater heaters, one operating at 3 MPa and the other at 0.2 MPa.

a) no feed water heater

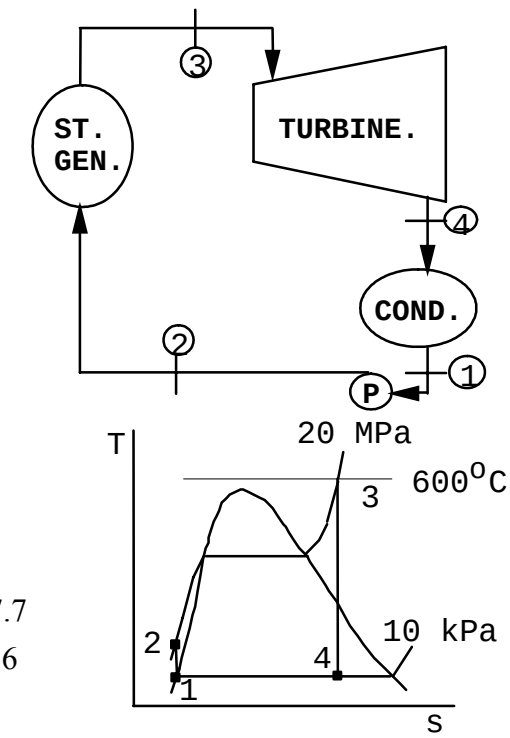

$$w_P = \int_1^2 v dP$$

$$\approx 0.00101(20000 - 10)$$

$$= 20.2 \text{ kJ/kg}$$

$$h_2 = h_1 + w_P = 191.8 + 20.2 = 212.0$$

$$s_4 = s_3 = 6.5048$$

$$= 0.6493 + x_4 \times 7.5009$$

$$x_4 = 0.78064$$

$$h_4 = 191.83 + 0.780\,64 \times 2392.8$$

$$= 2059.7$$

$$w_T = h_3 - h_4 = 3537.6 - 2059.7$$

$$= 1477.9 \text{ kJ/kg}$$

$$w_N = w_T - w_P = 1477.9 - 20.2 = 1457.7$$

$$q_H = h_3 - h_2 = 3537.6 - 212.0 = 3325.6$$

$$\eta_{TH} = \frac{w_N}{q_H} = \frac{1457.7}{3325.6} = \mathbf{0.438}$$

b) one feedwater heater

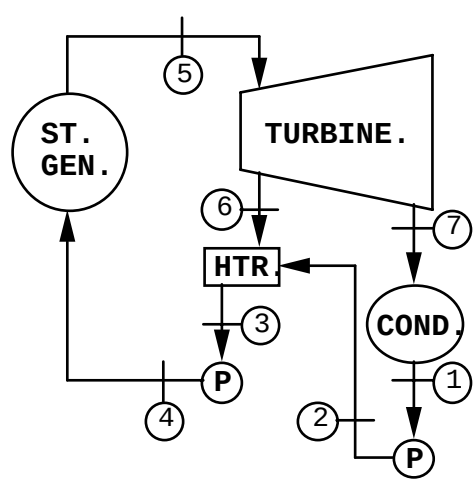

$$w_{P12} = 0.00101(1000 - 10)$$

$$= 1.0 \text{ kJ/kg}$$

$$h_2 = h_1 + w_{P12} = 191.8 + 1.0 = 192.8$$

$$w_{P34} = 0.001127\ (20000 - 1000)$$

$$= 21.4 \text{ kJ/kg}$$

$$h_4 = h_3 + w_{P34} = 762.8 + 21.4 = 784.2$$

$$s_6 = s_5 = 6.5048$$

$$= 2.1387 + x_6 \times 4.4478$$

$x_6 = 0.9816$

$h_6 = 762.8 + 0.9816 \times 2015.3 = 2741.1$

CV: heater

const: $m_3 = m_6 + m_2 = 1.0$ kg

1st law: $m_6 h_6 + m_2 h_2 = m_3 h_3$

$$m_6 = \frac{762.8 - 192.8}{2741.1 - 192.8} = 0.2237$$

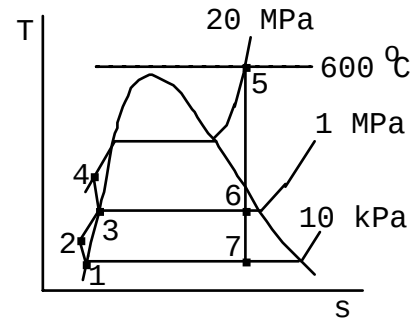

$m_2 = 0.7763$, $h_7 = 2059.7$ (= h_4 of part a))

CV: turbine $w_T = (h_5 - h_6) + m_2(h_6 - h_7)$

$= (3537.6 - 2741.1) + 0.7763(2741.1 - 2059.7) = 1325.5$ kJ/kg

CV: pumps

$w_P = m_1 w_{P12} + m_3 w_{P34} = 0.7763(1.0) + 1(21.4) = 22.2$ kJ/kg

$w_N = 1325.5 - 22.2 = 1303.3$ kJ/kg

CV: steam generator

$q_H = h_5 - h_4 = 3537.6 - 784.2 = 2753.4$ kJ/kg

$\eta_{TH} = w_N/q_H = 1303.3/2753.4 =$ **0.473**

c) two feedwater heaters

$w_{P12} = 0.00101 \times (200 - 10) = 0.2$ kJ/kg

$h_2 = w_{P12} + h_1 = 191.8 + 0.2 = 192.0$

$w_{P34} = 0.001061 \times (3000 - 200) = 3.0$ kJ/kg

$h_4 = h_3 + w_{P34} = 504.7 + 3.0 = 507.7$

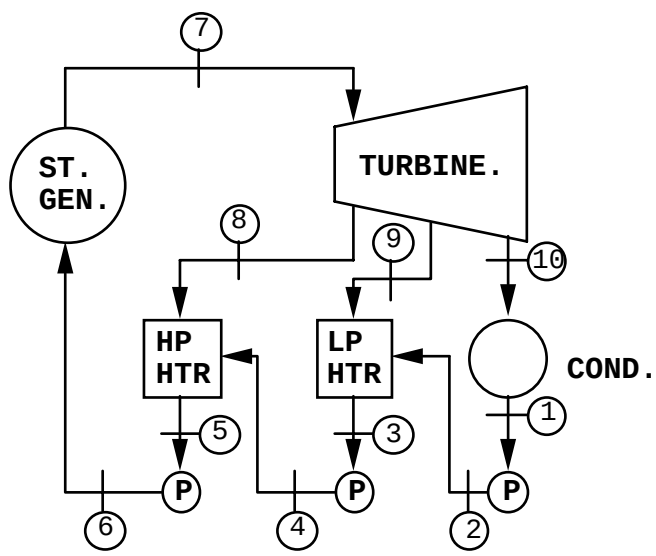

$w_{P56} = 0.001217(20000 - 3000)$
$= 20.7$ kJ/kg
$h_6 = h_5 + w_{P56} = 1008.4 + 20.7 = 1029.1$
$s_8 = s_7 = 6.5048$ } $T_8 = 293.2$ °C
at $P_8 = 3$ MPa } $h_8 = 2974.8$
$s_9 = s_8 = 6.5048 = 1.5301 + x_9 \times 5.5970$

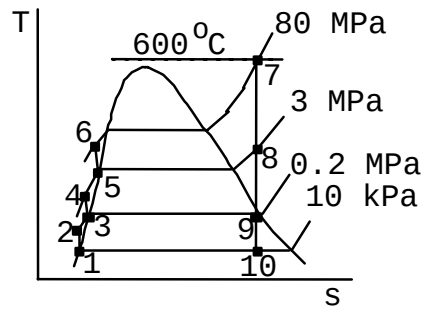

$x_9 = 0.8888$ => $h_9 = 504.7 + 0.888 \times 2201.9 = 2461.8$ kJ/kg

CV: high pressure heater

cont: $m_5 = m_4 + m_8 = 1.0$ kg ; 1st law: $m_5h_5 = m_4h_4 + m_8h_8$

$$m_8 = \frac{1008.4 - 507.7}{2974.8 - 507.7} = 0.2030 \qquad m_4 = 0.7970$$

CV: low pressure heater

cont: $m_9 + m_2 = m_3 = m_4$; 1st law: $m_9h_9 + m_2h_2 = m_3h_3$

$$m_9 = \frac{0.7970(504.7 - 192.0)}{2461.8 - 192.0} = 0.1098$$

$m_2 = 0.7970 - 0.1098 = 0.6872$

CV: turbine

$w_T = (h_7 - h_8) + (1 - m_8)(h_8 - h_9) + (1 - m_8 - m_9)(h_9 - h_{10})$
$= (3537.6 - 2974.8) + 0.797(2974.8 - 2461.8)$
$+ 0.6872(2461.8 - 2059.7) = 1248.0$ kJ/kg

CV: pumps

$w_P = m_1w_{P12} + m_3w_{P34} + m_5w_{P56}$
$= 0.6872(0.2) + 0.797(3.0) + 1(20.7) = 23.2$ kJ/kg
$w_N = 1248.0 - 23.2 = 1224.8$ kJ/kg

CV: steam generator

$q_H = h_7 - h_6 = 3537.6 - 1029.1 = 2508.5$ kJ/kg

$\eta_{TH} = w_N/q_H = 1224.8/2508.5 =$ **0.488**

11.133

A jet ejector, a device with no moving parts, functions as the equivalent of a coupled turbine-compressor unit (see Problems 9.157 and 9.168). Thus, the turbine-compressor in the dual-loop cycle of Fig. P11.122 could be replaced by a jet ejector. The primary stream of the jet ejector enters from the boiler, the secondary stream enters from the evaporator, and the discharge flows to the condenser. Alternatively, a jet ejector may be used with water as the working fluid. The purpose of the device is to chill water, usually for an air-conditioning system. In this application the physical setup is as shown in Fig. P11.133. Using the data given on the diagram, evaluate the performance of this cycle in terms of the ratio Q_L/Q_H.

a. Assume an ideal cycle.
b. Assume an ejector efficiency of 20% (see Problem 9.168).

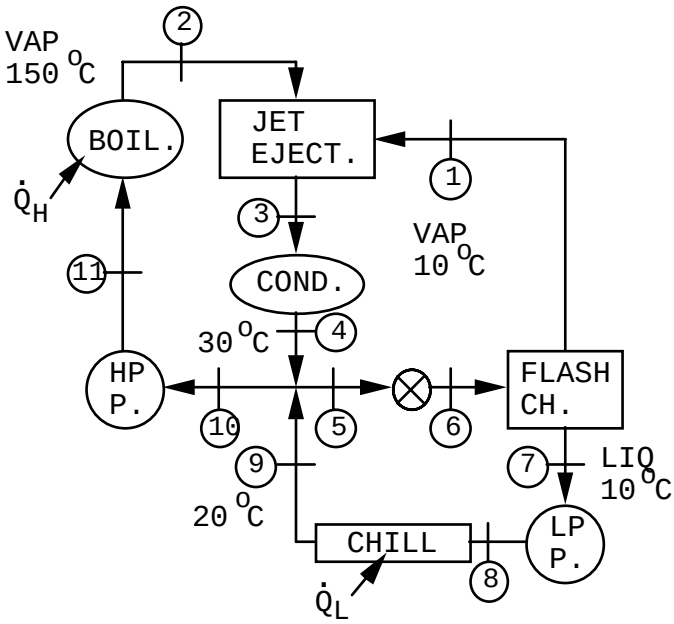

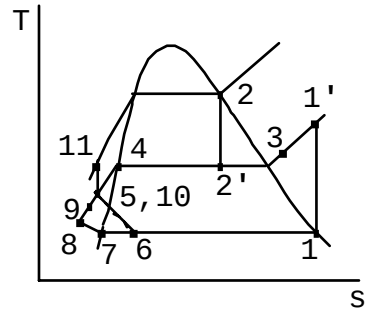

$T_1 = T_7 = 10\ ^oC$

$T_2 = 150\ ^oC$

$T_4 = 30\ ^oC$

$T_9 = 20\ ^oC$

Assume $T_5 = T_{10}$

(from mixing streams 4 & 9).

$P_3 = P_4 = P_5 = P_8 = P_9 = P_{10} = P_{G\ 30\ ^oC} = 4.246$ kPa

$P_{11} = P_2 = P_{G\ 150^oC} = 475.8$ kPa, $\quad P_1 = P_6 = P_7 = P_{G\ 10^oC} = 1.2276$ kPa

Cont: $\dot{m}_1 + \dot{m}_9 = \dot{m}_5 + \dot{m}_{10}$, $\dot{m}_5 = \dot{m}_6 = \dot{m}_7 + \dot{m}_1$

$\dot{m}_7 = \dot{m}_8 = \dot{m}_9$, $\dot{m}_{10} = \dot{m}_{11} = \dot{m}_2$, $\dot{m}_3 = \dot{m}_4$

a) $\dot{m}_1 + \dot{m}_2 = \dot{m}_3$; ideal jet ejector

$s_1' = s_1$ & $s_2' = s_2$ (1' & 2' at $P_3 = P_4$)

then, $\dot{m}_1(h_1' - h_1) = \dot{m}_2(h_2 - h_2')$

From $s_2' = s_2 = 0.4369 + x_2' \times 8.0164$; $x_2' = 0.7985$

$h_2' = 125.79 + 0.7985 \times 2430.5 = 2066.5$ kJ/kg

From $s_1' = s_1 = 8.9008 \Rightarrow T_1' = 112$ °C, $h_1' = 2710.4$ kJ/kg

$$\Rightarrow \dot{m}_1/\dot{m}_2 = \frac{2746.5 - 2066.5}{2710.4 - 2519.8} = 3.5677$$

Also $h_4 = 125.79$ kJ/kg, $h_7 = 42.01$ kJ/kg, $h_9 = 83.96$ kJ/kg

Mixing of streams 4 & 9 $\Rightarrow$ 5 & 10:

$$(\dot{m}_1 + \dot{m}_2)h_4 + \dot{m}_7 h_9 = (\dot{m}_7 + \dot{m}_1 + \dot{m}_2)h_{5=10}$$

Flash chamber (since $h_6 = h_5$) : $(\dot{m}_7 + \dot{m}_1)h_{5=10} = \dot{m}_1 h_1 + \dot{m}_7 h_1$

$\Rightarrow$ using the primary stream $\dot{m}_2 = 1$ kg/s:

$$4.5677 \times 125.79 + \dot{m}_7 \times 83.96 = (\dot{m}_7 + 4.5677)h_5$$

$$\& \ (\dot{m}_7 + 3.5677)h_5 = 3.5677 \times 2519.8 + \dot{m}_7 \times 42.01$$

Solving, $\dot{m}_7 = 202.627$ & $h_5 = 84.88$ kJ/kg

LP pump: $-w_{LP\,P} = 0.0010(4.246 - 1.2276) = 0.003$ kJ/kg

$h_8 = h_7 - w_{LP\,P} = 42.01 + 0.003 = 42.01$ kJ/kg

Chiller: $\dot{Q}_L = \dot{m}_7(h_9 - h_8) = 202.627(83.96 - 42.01) = 8500$ kW (for $\dot{m}_2 = 1$)

HP pump: $-w_{HP\,P} = 0.001002(475.8 - 4.246) = 0.47$ kJ/kg

$h_{11} = h_{10} - w_{HP\,P} = 84.88 + 0.47 = 85.35$ kJ/kg

Boiler: $\dot{Q}_{11} = \dot{m}_{11}(h_2 - h_{11}) = 1(2746.5 - 85.35) = 2661.1$ kW

$\Rightarrow \dot{Q}_L/\dot{Q}_H = 8500/2661.1 =$ **3.194**

b) Jet eject. eff. $= (\dot{m}_1/\dot{m}_2)_{ACT}/(\dot{m}_1/\dot{m}_2)_{IDEAL} = 0.20$

$$\Rightarrow \left(\dot{m}_1/\dot{m}_2\right)_{ACT} = 0.2 \times 3.5677 = 0.7135$$

using $\dot{m}_2 = 1$ kg/s: $1.7135 \times 125.79 + \dot{m}_7 \times 83.96 = (\dot{m}_7 + 1.7135)h_5$

$$\& \ (\dot{m}_7 + 0.7135)h_5 = 0.7135 \times 2519.8 + \dot{m}_7 \times 42.01$$

Solving, $\dot{m}_7 = 39.762$ & $h_5 = h_{10} = 85.69$ kJ/kg

Then, $\dot{Q}_L = 39.762(83.96 - 42.01) = 1668$ kW

$h_{11} = 85.69 + 0.47 = 86.16$ kJ/kg

$\dot{Q}_H = 1(2746.5 - 86.16) = 2660.3$ kW

& $\dot{Q}_L / \dot{Q}_H = 1668/2660.3 =$ **0.627**

Computer Problems

11.179 a

A refrigerator with R-12 as the working fluid has a minimum temperature of –10°C and a maximum pressure of 1 MPa. Assume an ideal refrigeration cycle as in Fig. 11.21. Find the specific heat transfer from the cold space and that to the hot space, and the coefficient of performance.

Solution:

Exit evaporator sat. vapor –10°C from B.3.1: $h_1 = 183.19$, $s_1 = 0.7019$ kJ/kgK

Exit condenser sat. liquid 1 MPa from B.3.1: $h_3 = 76.22$ kJ/kg

Compressor: $s_2 = s_1$ & P_2 from B.3.2 $\Rightarrow$ $h_2 \approx 210.1$ kJ/kg

Evaporator: $q_L = h_1 - h_4 = h_1 - h_3 = 183.19 - 76.22 =$ **107 kJ/kg**

Condenser: $q_H = h_2 - h_3 = 210.1 - 76.22 =$ **133.9 kJ/kg**

COP: $\beta = q_L/w_c = q_L/(q_H - q_L) =$ **3.98**

Ideal refrigeration cycle
$P_{cond} = P_3 = P_2 = 1$ MPa
$T_{evap} = -10^oC = T_1$

Properties from Table B.3

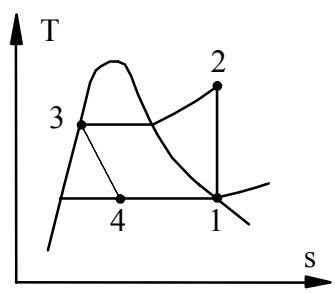

11.179 b

Consider an ideal refrigeration cycle that has a condenser temperature of 45°C and an evaporator temperature of –15°C. Determine the coefficient of performance of this refrigerator for the working fluid R-12.

Solution:

Ideal refrigeration cycle

$T_{cond} = 45^oC = T_3$

$T_{evap} = -15^oC = T_1$

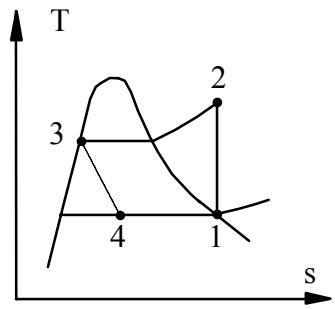

	Property for:	R-12
Compressor	h_1, kJ/kg	180.97
	$s_2 = s_1$, kJ/kg K	0.7051
	P_2, MPa	1.0843
	T_2, ^oC	54.7
	h_2, kJ/kg	212.63
	$w_C = h_2 - h_1$	31.66
Exp. valve	$h_3 = h_4$, kJ/kg	79.71
Evaporator	$q_L = h_1 - h_4$	101.26
	$\beta = q_L/w_C$	**3.198**

The value of h_2 is taken from the computer program as it otherwise will be a double interpolation due to the value of P_2.

11.179 c

A refrigerator in a meat warehouse must keep a low temperature of -15°C and the outside temperature is 20°C. It uses R-12 as the refrigerant which must remove 5 kW from the cold space. Find the flow rate of the R-12 needed assuming a standard vapor compression refrigeration cycle with a condenser at 20°C.

Solution:

Basic refrigeration cycle: $T_1 = T_4 = -15°C$, $T_3 = 20°C$

Computer Tables: $h_4 = h_3 = 54.87$ kJ/kg; $h_1 = h_g = 180.97$ kJ/kg

$$\dot{Q}_L = \dot{m}_{R\text{-}12} \times q_L = \dot{m}_{R\text{-}12}(h_1 - h_4)$$

$$q_L = 180.97 - 54.87 = 126.1 \text{ kJ/kg}$$

$$\dot{m}_{R\text{-}12} = 5.0 / 126.1 = \mathbf{0.03965\ kg/s}$$

Ideal refrigeration cycle

$T_{cond} = 20^oC$

$T_{evap} = -15^oC = T_1$

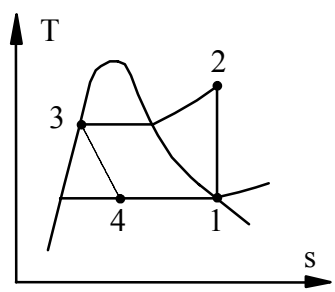

11.179 d

In an actual refrigeration cycle using R-12 as the working fluid, the refrigerant flow rate is 0.05 kg/s. Vapor enters the compressor at 150 kPa, –10°C, and leaves at 1.2 MPa, 75°C. The power input to the compressor is measured and found be 2.4 kW. The refrigerant enters the expansion valve at 1.15 MPa, 40°C, and leaves the evaporator at 175 kPa, –15°C. Determine the entropy generation in the compression process, the refrigeration capacity and the coefficient of performance for this cycle.

Solution:

Actual refrigeration cycle

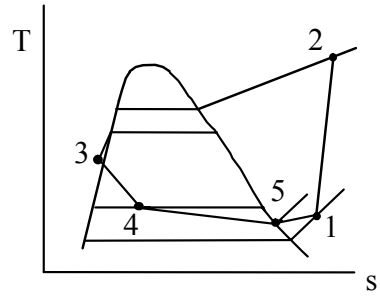

1: compressor inlet $T_1 = -10^oC$, $P_1 = 150$ kPa

2: compressor exit $T_2 = 75^oC$, $P_2 = 1.2$ MPa

3: Expansion valve inlet $T_3 = 40^oC$
$P_3 = 1.15$ MPa

5: evaporator exit $T_5 = -15^oC$, $P_5 = 175$ kPa

Table B.3 $h_1 = 184.8$, $s_1 = 0.7324$, $h_2 = 226.7$, $s_2 = 0.741$

CV Compressor: $h_1 + q_{COMP} + w_{COMP} = h_2$; $s_1 + \int dq/T + s_{gen} = s_2$

$$w_{COMP} = \dot{W}_{COMP}/\dot{m} = 2.4/0.05 = 48.0 \text{ kJ/kg}$$

$$q_{COMP} = h_2 - w_{COMP} - h_1 = 226.7 - 48.0 - 184.8 = -6.1 \text{ kJ/kg}$$

$$s_{gen} = s_2 - s_1 - q / T_o = 0.741 - 0.7324 + 6.1/298.15 = \mathbf{0.029\ kJ\ /\ kg\ K}$$

C.V. Evaporator

$$q_L = h_5 - h_4 = 181.5 - 74.59 = 106.9 \text{ kJ/kg}$$

$$\Rightarrow \dot{Q}_L = \dot{m}q_L = 0.05 \times 106.9 = \mathbf{5.346\ kW}$$

COP: $\beta = q_L/w_{COMP} = 106.9/48.0 = \mathbf{2.23}$

11.180 a

Do Problem 11.21 with R-22 as the working fluid.

A supply of geothermal hot water is to be used as the energy source in an ideal Rankine cycle, with R-134a as the cycle working fluid. Saturated vapor R-134a leaves the boiler at a temperature of 85°C, and the condenser temperature is 40°C. Calculate the thermal efficiency of this cycle.

Solution:

CV: Pump (use R-22 Computer Table)

$$w_P = h_2 - h_1 = \int_1^2 vdP \approx v_1(P_2 - P_1) = 0.000884(4037 - 1534) = 2.21 \text{ kJ/kg}$$

$$h_2 = h_1 + w_P = 94.27 + 2.21 = 96.48 \text{ kJ/kg}$$

CV: Boiler: $q_H = h_3 - h_2 = 253.69 - 96.48 = 157.21$ kJ/kg

CV: Turbine

$$s_4 = s_3 = 0.7918 = 0.3417 + x_4 \times 0.5329, \quad => \quad x_4 = 0.8446$$

$$h_4 = 94.27 + 0.8446 \times 166.88 = 235.22 \text{ kJ/kg}$$

$$w_T = h_3 - h_4 = 253.69 - 235.22 = 18.47 \text{ kJ/kg}$$

$$\eta_{TH} = w_{NET}/q_H = (18.47 - 2.21)/157.21 = \mathbf{0.1034}$$

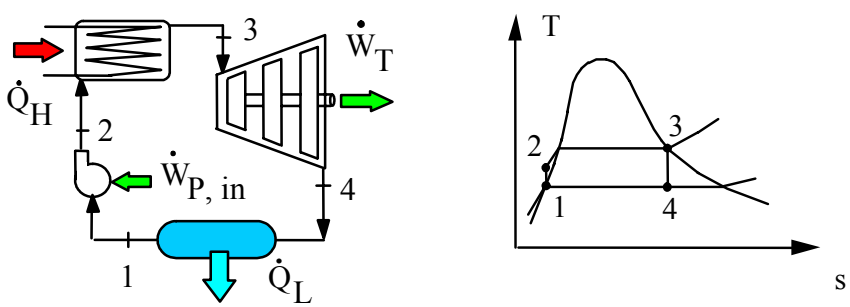

11.180 b

Do problem 11.24 with R-22 as the working fluid.

A flow with 2 kg/s of water is available at 95°C for the boiler. The restrictive factor is the boiling temperature of 85°C. Therefore, break the process up from 2-3 into two parts as shown in the diagram.

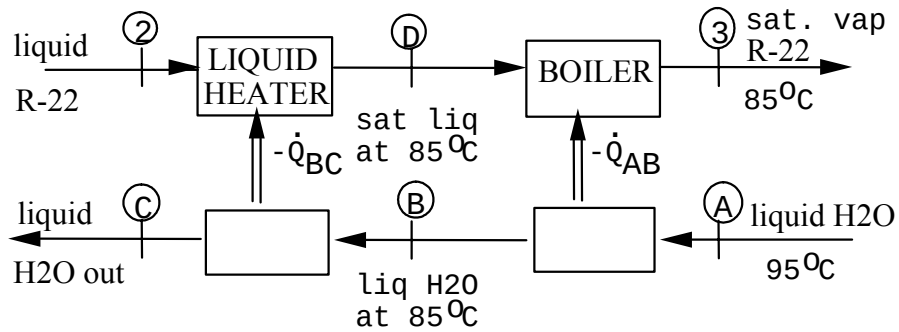

$$-\dot{Q}_{AB} = \dot{m}_{H2O}(h_A - h_B) = 2(397.94 - 355.88) = 84.12 \text{ kW}$$

$$= \dot{m}_{R\text{-}22}(253.69 - 165.09) \quad \Rightarrow \quad \dot{m}_{R\text{-}22} = 0.949 \text{ kg/s}$$

To verify that $T_D = T_3$ is the restrictive factor, find T_C.

$$-\dot{Q}_{AC} = 0.949(165.09 - 96.48) = 65.11 = 2.0(355.88 - h_C)$$

$$h_C = 323.32 \text{ kJ/kg} \quad \Rightarrow \quad T_C = 77.2^{o}\text{C} \quad \textbf{OK}$$

State 1: 40°C, 1533.5 kPa, $v_1 = 0.000884$ m^3/kg

CV Pump: $w_P = v_1(P_2 - P_1) = 0.000884(4036.8 - 1533.5) = 2.21$ kJ/kg

CV: Turbine

$$s_4 = s_3 = 0.7918 = 0.3417 + x_4 \times 0.5329 \quad \Rightarrow \quad x_4 = 0.8446$$

$$h_4 = 94.27 + 0.8446 \times 166.88 = 235.22 \text{ kJ/kg}$$

Energy Eq.: $w_T = h_3 - h_4 = 253.69 - 235.22 = 18.47$ kJ/kg

Cycle: $w_{NET} = w_T - w_P = 18.47 - 2.21 = 16.26$ kJ/kg

$$\dot{W}_{NET} = \dot{m}_{R22} w_{NET} = 0.949 \times 16.26 = \mathbf{15.43\ kW}$$

11.180 c

Consider an ideal refrigeration cycle that has a condenser temperature of 45°C and an evaporator temperature of –15°C. Determine the coefficient of performance of this refrigerator for the working fluid R-22.

Solution:

Ideal refrigeration cycle

$T_{cond} = 45^oC = T_3$

$T_{evap} = -15^oC = T_1$

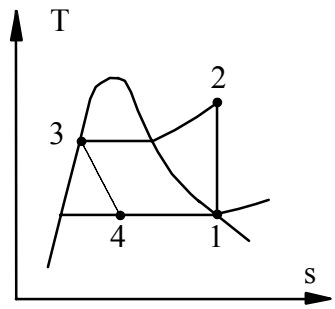

	Property for:	R-22
Compressor	h_1, kJ/kg	244.13
	$s_2 = s_1$, kJ/kg K	0.9505
	P_2, MPa	1.729
	T_2, ^oC	74.4
	h_2, kJ/kg	289.26
	$w_C = h_2 - h_1$	45.13
Exp. valve	$h_3 = h_4$, kJ/kg	100.98
Evaporator	$q_L = h_1 - h_4$	143.15
	$\beta = q_L/w_C$	**3.172**

The value of h_2 is taken from the computer program as it otherwise will be a double interpolation due to the value of P_2.

11.180 d

The refrigerant R-22 is used as the working fluid in a conventional heat pump cycle. Saturated vapor enters the compressor of this unit at 10°C; its exit temperature from the compressor is measured and found to be 85°C. If the compressor exit is at 2 MPa what is the compressor isentropic efficiency and the cycle COP?

Solution:

R-22 heat pump:
Computer Table
State 1: $T_{EVAP} = 10^oC$, x = 1
$h_1 = 253.42$ kJ/kg, $s_1 = 0.9129$ kJ/kg K

State 2: T_2, P_2: $h_2 = 295.17$ kJ/kg

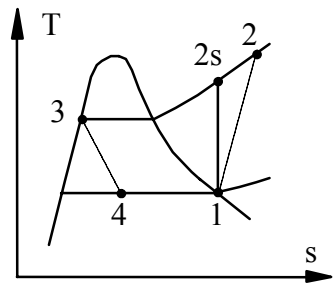

C.V. Compressor

Energy Eq.: $w_{C\,ac} = h_2 - h_1 = 295.17 - 253.42 =$ **41.75 kJ/kg**

State 2s: 2 MPa , $s_{2S} = s_1 = 0.9129$ kJ/kg $T_{2S} = 69^oC$, $h_{2S} = 280.2$ kJ/kg

Efficiency: $$\eta = \frac{w_{C\,s}}{w_{C\,ac}} = \frac{h_{2S} - h_1}{h_2 - h_1} = \frac{280.2 - 253.42}{295.17 - 253.42} = \mathbf{0.6414}$$

C.V. Condenser

Energy Eq.: $q_H = h_2 - h_3 = 295.17 - 109.6 = 185.57$ kJ/kg

COP Heat pump: $$\beta = \frac{q_H}{w_{C\,ac}} = \frac{185.57}{41.75} = \mathbf{4.44}$$